MATERIAL HANDLING SOLUTIONS

www.pflow.com
P 414 352 9000
F 414 352 9002
6720 N. Teutonia Ave.
Milwaukee, WI 53209

21 Series | Hydraulic VRC

Owner's Manual

Important:

Read this entire manual. Important safety information is included.

The illustrations depicted in this manual are not to scale or detail. The illustrations are for reference only.

15707-0002 | Rev F | 2018-10-15 | Printed in the U.S.A.

Table of Contents

MATERIAL HANDLING SOLUTIONS
www.pflow.com
P 414 352 9000
F 414 352 9002
6720 N. Teutonia Ave.
Milwaukee, WI 53209

MATERIAL HANDLING SOLUTIONS
www.pflow.com
P 414 352 9000
F 414 352 9002
6720 N. Teutonia Ave.
Milwaukee, WI 53209

MATERIAL HANDLING SOLUTIONS
www.pflow.com
P 414 352 9000
F 414 352 9002
6720 N. Teutonia Ave.
Milwaukee, WI 53209

MATERIAL HANDLING SOLUTIONS

www.pflow.com
P 414 352 9000
F 414 352 9002
6720 N. Teutonia Ave.
Milwaukee, WI 53209

PFlow Industries, Inc.
6720 N. Teutonia Avenue
Milwaukee, Wisconsin 53209

Office
Phone: 414-352-9000
Fax: 414-352-9002

Product Support Department
e-mail: psd@pflow.com

Sales
e-mail: sales@pflow.com

For a list of contact personnel visit the PFlow Industries, Inc. website at:
http://www.pflow.com/contact-us/

Documentation

PFlow Industries, Inc. reserves the right to make changes or improvements to the standard model line at any time. PFlow Industries, Inc. reserves the right to make changes to subsequent editions of the manual without prior notice to holders of this edition.

Copyright Notice

Trademarks

All trademarks referenced in this manual are the property of their respective owners.

System Modifications/ Disclaimer

Mechanical or electrical modifications performed on the VRC not approved by PFlow Industries, Inc. may void any warranty and/or service agreements. Please contact the PFlow Product Support Department for assistance with service modifications.

Training

Training is available upon request from the Product Support Department. Half-Day, Full-Day, and Two-Day sessions are customized to fit specific needs - either for a single VRC type or for the entire product line.

On-site Supervision

On-site supervision services are available from the Product Support Department. Contact our Field Operations Manager for more details.

Source Language

This manual is written in American English.

MATERIAL HANDLING SOLUTIONS

www.pflow.com
P 414 352 9000
F 414 352 9002
6720 N. Teutonia Ave.
Milwaukee, WI 53209

MATERIAL HANDLING SOLUTIONS
www.pflow.com
P 414 352 9000
F 414 352 9002
6720 N. Teutonia Ave.
Milwaukee, WI 53209

Introduction

This manual provides information about the PFlow Industries, Inc. custom designed Vertical Reciprocating Conveyor (VRC). As the nations' leading manufacturer of vertical material handling equipment, PFlow Industries, Inc. is confident that this new VRC will provide many years of reliable service.

General Overview

The VRC provides a safe and simple means of moving material from one level to another. The simplicity of design and few moving components ensure a trouble-free, long life, with low maintenance and little downtime.

Code Requirements

This VRC is designed for the movement of materials only, up to the VRC's rated capacity, from one level to the next. Do not allow anyone to ride on the VRC. VRCs are **not** elevators, and are specifically excluded within the scope of the ASME A17.1 Safety Code for Elevators and Escalators. VRCs are included in ASME B20.1 Safety Standard for Conveyors and Related Equipment, which is incorporated by reference into OSHA 29 CFR 1910. A copy of the ASME B20.1 standard can be purchased at www.asme.org and other sources. PFlow Industries, Inc. recommends that this standard be referenced for appropriate installation, maintenance, inspection, and operation in relation to hazards. All electrical designs and components are in accordance with National Electric Code (NEC) requirements. Local codes may require initial inspection of the installation and periodic inspection and testing of the unit. Contact PFlow Industries, Inc. for more information in the event an inspection is required.

NOTE

The information and illustrations in this manual are intended only as an aid to understanding the VRCs general installation. The information and illustrations do not cover every possible contingency or circumstance regarding nonstandard options or site conditions.

If there is a problem, call PFlow Industries, Inc. at (414) 352-9000, during normal business hours, 8:30 a.m. to 5:00 p.m. central standard time, Monday through Friday. Outside of those hours, see the PFlow Industries, Inc. Contact Information page for additional information. Use the model number and serial number or the PFlow Industries, Inc. General Arrangement (GA) drawing number for the lift in all correspondence.

Parts

Equipment damage resulting from modification in any manner from the original model, including the substitution of parts other than factory authorized parts, will void the warranty. Furthermore, PFlow Industries, Inc. will not be liable for any loss, injury, or damage to persons or property, nor for direct, indirect, or consequential damage of any kind resulting from modified or substitution of parts other than factory authorized parts of said material or equipment.

PFlow Industries, Inc. maintains a complete stock of, or has access to, all replacement components. Detailed records of all equipment sold are kept. If a component is damaged in shipment, is defective or missing, contact PFlow Industries immediately.

Service

The PFlow Industries, Inc. Product Support Department will assist maintenance and service personnel with any questions or problems regarding the equipment or installation.

Feedback

Your feedback is important. Please help PFlow Industries, Inc. understand if the equipment has met your expectations. Please complete the questionnaire in this manual. The questionnaire will help us address any comments and/or concerns.

MATERIAL HANDLING SOLUTIONS
www.pflow.com
P 414 352 9000
F 414 352 9002
6720 N. Teutonia Ave.
Milwaukee, WI 53209

MATERIAL HANDLING SOLUTIONS
www.pflow.com
P 414 352 9000
F 414 352 9002
6720 N. Teutonia Ave.
Milwaukee, WI 53209

Parts and Labor

Parts:		Labor:	
Structure	Lifetime	Structure	Lifetime
Manufactured Components	1 Year	Manufactured Components	1 Year
Purchased Components	1 Year	Purchased Components	90 Days
Gates and Enclosures	90 Days	Gates and Enclosures	90 Days

Definitions

- Structure is defined as columns, carriage, and pre-fabricated bracing (excluding carriage side guards).
- Manufactured components are defined as those components manufactured by PFlow Industries, Inc.
- Purchased components are those components that are used as supplied by vendors.

Warranty

PFlow Industries, Inc. expressly warrants to the original purchaser that this product will be free from defects in material and workmanship under normal, intended use. The warranty period begins 30 days after shipment.

Exclusions

This warranty does not apply to:

1. Equipment or components damaged or broken in transit or shipping.
2. Replacement of wear parts.
3. Equipment failures caused by abuse, misuse, exceeding recommended capacities, impact with other objects, negligence, improper installation, unskilled use, unskilled maintenance, inadequate maintenance, or incorrect adjustments.
4. Exposure to a corrosive or abrasive environment or exterior elements unless specifically built for that environment.
5. Equipment that has been repaired, altered or modified in any manner outside of the manufacturing facility, substitution of parts other than factory authorized parts, removal of any parts, or addition of any parts without prior written permission by PFlow Industries, Inc.
6. Any losses or damages resulting from loss of data, loss of revenue or profits, loss of products, incidental or consequential damages, delays, or expenses incurred by failure of said part or parts even if advised of the possibility thereof.
7. Lost time and/or additional trips for missing or damaged components.
8. Expedited freight charges.

Obligation

The obligation for PFlow Industries, Inc. is limited to only the replacement or repair of defective components that received prior authorization. This is the owner's sole remedy.

PFlow Industries, Inc. will bear normal labor charges performed by an authorized PFlow Industries, Inc. service agent during standard business hours, excluding overtime, holiday rates, or any additional fees.

This warranty applies to all models and no person except an officer of PFlow Industries, Inc. is authorized to modify this warranty or to incur on behalf of PFlow Industries, Inc. any other obligation or liability in connection with PFlow Industries, Inc. equipment.

PFLOW INDUSTRIES MATERIAL HANDLING SOLUTIONS
www.pflow.com
P 414 352 9000
F 414 352 9002
6720 N. Teutonia Ave.
Milwaukee, WI 53209

Liability

PFlow Industries, Inc. believes, to the best of our knowledge, that the information in the equipment manuals are accurate. In the event that technical or typographical errors exist, PFlow Industries, Inc. reserves the right to make changes to subsequent editions of the manual without prior notice to holders of this edition. The reader should consult PFlow Industries, Inc. if errors are suspected.

The customer's right to recover damages caused by fault or negligence on the part of PFlow Industries, Inc. shall be limited to the amount paid to PFlow Industries, Inc. by the customer. The limitation of liability of PFlow Industries, Inc. will apply regardless of the form of action, whether in contract or tort, including negligence. Any action against PFlow Industries, Inc. must be brought within one (1) year after that cause of action accrues.

PFlow Industries, Inc. will not be liable for any loss, injury, or damage to persons or property, nor for direct, indirect, or consequential damage of any kind resulting from failure or defective operation of said material or equipment.

Warranty Procedures

All billing must be in accordance with our Warranty Procedures. Replacement of defective parts will be handled in accordance with the Return Goods Authorization policy for PFlow Industries, Inc.

Pre-Authorization

- All warranty work must be pre-authorized by PFlow Industries, Inc. Product Support Department prior to starting work.
- Where distance and or experience may be more cost-effective, PFlow Industries, Inc. reserves the right to use alternate organizations.
- Labor is defined as a maximum of two hours travel per call, plus reasonable on-site repair time as determined by PFlow Industries, Inc.
- Local purchase of components must be pre-authorized.

1. Notify the PFlow Industries, Inc. Product Support Department of the problem for authorization.
2. PFlow Industries, Inc. will determine:
   - The cause of the problem.
   - Who will do the repair work.
   - The repair details involved.
3. If PFlow Industries, Inc. decides that your organization or your subcontractor will do the work, an authorization number will be assigned which must be referenced on all subsequent paperwork.

NOTE *Notify PFlow Industries, Inc. by phone, FAX, or e-mail during the next business day if an event occurs during our non-working hours. Issuance of an authorization number does not guarantee approval and/or payment.*

Invoices

1. Submit an invoice for approval within 30 days after the date the work was completed. Payment is made 30 days after the date of approval.
2. A deduction from outstanding payments to PFlow Industries, Inc. for warranty is never authorized.
3. Invoices received without sufficient information will be returned. Invoices will be reconsidered for approval when complete documentation is received. All invoices must include, in detail, the following:

☐ PFlow serial number.	☐ Labor hours expended resolving the problem.
☐ Date the work was performed.	☐ Rates per hour.
☐ Description of the problem.	☐ Copies of receipts for materials purchased.
☐ Travel time incurred.	☐ Detailed description of work completed.

MATERIAL HANDLING SOLUTIONS
www.pflow.com
P 414 352 9000
F 414 352 9002
6720 N. Teutonia Ave.
Milwaukee, WI 53209

Read the Entire Manual

Important: carefully read the entire manual upon receipt of the VRC. Improper installation, alteration, adjustment, service, cleaning, or maintenance could result in death, severe injury, or property damage. Instructions and warnings must be read and thoroughly understood by all operators and users. PFlow Industries, Inc. recommends that the owner conduct regular staff training including safety instructions on a regular basis to avoid the risk of accident or damage to the VRC.

Following procedures other than those indicated in this guide to install, use, and maintain the VRC is considered inappropriate and may cause fatal accidents, personal injury, or property damage, in addition to invalidating the warranty.

Intended Purpose

The intended purpose of the PFlow Industries, Inc. Vertical Reciprocating Conveyor (VRC) is to provide a safe and simple means of moving materials only, up to the VRCs rated capacity, from one level to another. VRCs are **not** elevators. The VRC is exclusively intended for use in establishments where all operators have been trained to understand the purpose, limitations, and associated hazards of the VRC. Any other use of the VRC is strictly forbidden.

Safety Alert Symbols

To ensure your safety and the safety of those around you, it is important that you read, observe, and understand ALL safety precautions relative to a particular task. Safety precautions in the manual are labeled with an alert symbol followed by the word **DANGER**, **WARNING**, or **CAUTION**.

⚠ This is the safety alert symbol. It is used to alert you to potential physical injury hazards. Obey all safety messages that follow this symbol to avoid possible injury or death.

⚠ DANGER Indicates a hazardous situation that, if not avoided, will result in death or serious injury.

⚠ WARNING Indicates a hazardous situation that, if not avoided, could result in death or serious injury.

⚠ CAUTION Indicates a hazardous situation that, if not avoided, could result in minor or moderate injury.

NOTICE Used to address practices not related to physical injury.

MATERIAL HANDLING SOLUTIONS
www.pflow.com
P 414 352 9000
F 414 352 9002
6720 N. Teutonia Ave.
Milwaukee, WI 53209

DANGER

- Stay within the rated lift capacity.
- Make sure all safety devices are in place and operable before using the equipment. If any safety device is missing or inoperable, immediately remove the equipment from service.
- High Voltage! A licensed electrician must install all electrical connections and permanent wiring in accordance with applicable local or national electrical codes. Make sure the equipment is properly grounded in accordance with local electrical codes or, in the absence of local codes, with the current edition of the National Electrical Code NFPA No. 70.
- Falling column hazard! Make sure all beams, columns, posts, enclosure panels, and components are properly supported during installation. Illustrations may show the beams, columns, posts, enclosure panels, and components unsupported in order to make the equipment and installation instructions clearly understood.
- Keep clear of unsupported platforms. Stay out of the area under a raised platform. If a maintenance operation requires the carriage to remain in the raised position, refer to Bulletin 15709-0083 for additional information or contact PFlow Industries, Inc. Product Support Department for assistance.

WARNING

- Passengers are not permitted. Riding may result in death or serious personal injury.
- Allow only competent adults who have been properly trained in the safe use of this equipment to operate it.
- This equipment can be dangerous if not used properly. Allow only properly trained and authorized personnel to operate this equipment.
- This equipment must be maintained to ensure safety. Allow only properly trained personnel to service the equipment. Implement a routine safety inspection plan and follow the recommended preventive maintenance schedule in the owner's manual.
- Lockout/tagout equipment before performing any adjustments or maintenance. If the equipment is not locked out, it could start unexpectedly and cause injury or damage. ***Make sure all personnel are aware of the potential for stored energy to be present even after the power has been locked out.*** Refer to ANSI Z244.1 and OSHA 29 CFR 1910.147 for minimum requirements for a lockout/tagout system. There may be additional state or local requirements.
- Components and accessories may be heavy. To prevent serious injury, use the appropriate lifting apparatus when handling the components and installing the VRC.

MATERIAL HANDLING SOLUTIONS
www.pflow.com
P 414 352 9000
F 414 352 9002
6720 N. Teutonia Ave.
Milwaukee, WI 53209

⚠ WARNING

- If any defects relating to operating safety and reliability are detected or if any damage occurs, the VRC must be taken out of operation immediately.
- Before the VRC is put into operation, all VRC parts must comply with all relevant health and safety directives and regulations.
- Do not switch the main power supply on or start the VRC when persons are in contact with the VRC.
- Make sure that no persons or objects are within the range of any moving parts of the VRC.
- Climbing, sitting, walking, or riding on equipment while the equipment is in operation could result in death or serious injury.
- If this VRC needs to be modified in any way, contact PFlow Industries, Inc. for assistance. Do not make any unauthorized changes.
- Close all gates before the carriage is moved. Never leave the lift unattended with the gates in the open position. Never close gates when a person is on the carriage or within the fenced area.
- Place the load in the center of the lift platform to avoid shifting loads. Make sure that any portion of the load does not overhang the perimeter of the carriage. This could create an unstable load condition.
- Lockout/tagout the VRC before removing jammed product. Be aware that stored energy in the lift components may move or shift when the jam is removed. De-energize any circuit before work is begun.
- Do not overtravel! Stops, mechanical or electrical, must be in place to prevent the carriage from traveling beyond the intended floor level. Overtravel could cause permanent damage to the carriage or failure of the lifting mechanism.
- Entanglement hazard! Secure long hair, wear snug-fitting clothing, and avoid wearing jewelry while using the VRC.

MATERIAL HANDLING SOLUTIONS
www.pflow.com
P 414 352 9000
F 414 352 9002
6720 N. Teutonia Ave.
Milwaukee, WI 53209

Hydraulic Safety Precautions

WARNING

- Wear personal protective equipment, such as gloves and safety glasses, whenever installing, servicing, or checking a hydraulic system.
- Assume that all hydraulic hoses and components are pressurized. Relieve all hydraulic pressure before disconnecting any hydraulic line.
- Never try to stop or check for a hydraulic leak with any part of your body; use a piece of cardboard to check for hydraulic leaks.
- Small hydraulic hose leaks are extremely dangerous, and can inject hydraulic oil under the skin, even through gloves.
- Infection and gangrene are possible when hydraulic oil penetrates the skin. See a doctor immediately to prevent loss of limb or death.

- Ingesting hydraulic fluid is toxic and hazardous to people and wildlife. Symptoms may be skin irritation, weakness in the hands, intestinal bleeding, pneumonia, or death. Seek first aid immediately. Dispose of spilled fluids appropriately.

- Hydraulic fluid is flammable. Make sure you know where fire extinguishers are kept and how to use them. Do not weld on or near pipes, tubes, or hoses that are filled with fluid.
- Do not overfill the hydraulic oil tank. Any overflow could cause a fire. Immediately repair any hydraulic oil leaks and clean up any spills.
- Shut off all electrical power to the Vertical Reciprocating Conveyor (VRC) while filling the hydraulic oil tank.
- Materials and fluids soaked in hydraulic fluid should be stored in sealed metal containers and disposed of at proper places.

- Hydraulic fluid is slippery. Wipe up spills immediately to reduce the risk of falls or slips.

MATERIAL HANDLING SOLUTIONS
www.pflow.com
P 414 352 9000
F 414 352 9002
6720 N. Teutonia Ave.
Milwaukee, WI 53209

⚠ CAUTION

- During operation, the surfaces of some components may become hot. Avoid touching hot surfaces or wear protective gloves.
- Inform personnel about the location and operation of emergency stops and power disconnection points.
- If any unsafe or unusual conditions are observed, stop the equipment and remove it from service. Report the condition to your supervisor.
- Paint overspray on the hydraulic cylinder rod will damage the packing seals and void the manufacturer's warranty. Cover exposed rods with removable plastic or soluble grease while painting or touching up the VRC.

MATERIAL HANDLING SOLUTIONS
www.pflow.com
P 414 352 9000
F 414 352 9002
6720 N. Teutonia Ave.
Milwaukee, WI 53209

Electrical Safety Precautions

⚠ DANGER

High Voltage! Employees servicing or maintaining VRCs may be exposed to death or serious personal injury if hazardous energy is not properly controlled. De-energize any circuit before work is begun. Follow your facilities procedures or OSHA lockout/tagout (LOTO) procedures anytime maintenance or service is being performed on any electrical box or component.

⚠ CAUTION

The incoming voltage source must match the voltage identified on the rating tag. The rating tag provides essential technical information required for any installation, maintenance, or repairs. Do not remove, damage, or modify the rating tag.

De-energize the Circuit

1. Lockout/tagout whenever any work, maintenance, or service is performed on any electrical box or component. Make sure circuits are de-energized before starting work, using a functional, properly rated, and well maintained multimeter or voltage sensing device. Make sure the device is rated for the level of voltage being measured and is sensitive enough for the application.
2. Use fuse pullers to change a fuse; ***never*** use bare hands, pliers, or screwdrivers.
3. Install covers on exposed electrical devices or wires to protect personnel from serious injury.
4. Ground all metal connection boxes, switch boxes, starting boxes, transformers, motors, limit switches, interlocks, and push-button stations to prevent shock to personnel.
5. When using a portable meter, never leave one lead dangling with the other lead connected. Anyone touching the lead may receive a shock through the meter.
6. Make sure that all is clear following lockout/tagout procedures before applying power to a circuit. This is necessary in order to protect personnel from injury and to prevent damage to the equipment.
7. Avoid accidental contact with equipment or conductors which are known to be energized or are ***not*** known to be de-energized. If it is necessary to work on equipment while it is energized, use extra care. Always test and repair equipment that appears damaged or delivers an electric shock.

Take time to be careful! Follow all safety precautions to prevent death or personal injury.

PFLOW INDUSTRIES MATERIAL HANDLING SOLUTIONS
www.pflow.com
P 414 352 9000
F 414 352 9002
6720 N. Teutonia Ave.
Milwaukee, WI 53209

Electrical Safety Precautions

DANGER

High Voltage! To prevent serious injury, death, or property damage, all electrical connections and permanent wiring must be installed by a licensed electrician in accordance with applicable local or national electrical codes. Arc flash and shock hazard appropriate PPE is required. This equipment must be adequately grounded in accordance with local electrical codes or, in the absence of local codes, with the current edition of the National Electrical Code NFPA No. 70.

Working on Energized Circuits

When electrical repair or maintenance work is required that prohibits de-energizing the circuits involved, extreme caution must be used. The work should be completed only by authorized, well trained and supervised personnel who are fully aware of the dangers involved. All practical safety measure must be used to protect the personnel performing the required work. In addition to the NFPA No. 70 codes, the following precautions **must** be taken:

1. Remove all wristwatches, watch chains, rings, necklaces, metal appendages to clothing, oversized metallic belt-buckles, metal piercings, or loose clothing. These items have the potential to make accidental contact with energized surfaces. In addition, secure long hair with a hair net or cover with a plastic helmet.
2. Remove all hair barrettes or bobby pins. These items are electrically conductive and accidental contact may cause serious personal injury.
3. Wear dry clothing and shoes. Moisture should not be present on the soles of shoes. Water is electrically conductive and accidental contact may cause death or serious personal injury.
4. Insulate the worker from the ground. Cover any adjacent grounded metal surfaces with an insulating material. Suitable insulating materials are dry wood, rubber mats, dry canvas, dry phenolic material, or heavy, multi-ply paper (cardboard). Make sure that the insulating material has no holes present and there are no conductive materials (e.g., staples) embedded. Cover a sufficient area with the insulating material to make sure that adequate space is permitted for worker movement.
5. Use insulated tools when working on energized circuits or fuse box. These insulated tools must be rated to withstand the voltage of the energized circuits.

Notes for the Installation Electrician

The installation electrician must take the following precautions:

1. Locate and review the electrical schematics furnished with the equipment.
2. Verify the proper fit-up, wiring and operation of all required electrical components.
3. Mount the push button station out of reach of someone located on the carriage (approximately six feet [1829mm]).
4. Wire standard lift limit switches on the chain tensioning assembly (see the job specific electrical schematic as required) for mechanical VRCs as follows:
   If the tensioner chain becomes slack causing the arm on the limit switch to move down or if a strong tension is exerted on the tensioner chain causing the arm to move up, there is a break in the control power. The limit switches are designated with an LS# on the electrical schematic.

MATERIAL HANDLING SOLUTIONS
www.pflow.com
P 414 352 9000
F 414 352 9002
6720 N. Teutonia Ave.
Milwaukee, WI 53209

Entrance Below a Raised Carriage Deck

PFLOW INDUSTRIES MATERIAL HANDLING SOLUTIONS

www.pflow.com
P 414 352 9000
F 414 352 9002
6720 N. Teutonia Ave.
Milwaukee, WI 53209

Safety First

The most common reason to access the area below a raised carriage deck is to clean debris from the pit or hoistway. This is best accomplished using a long handled broom or rake to avoid entry under the raised carriage deck. Entry under the raised carriage deck is acceptable only when unavoidable and then only if the proper precautions are taken. It is the user's responsibility to ensure that the following conditions be met before allowing qualified personnel to enter the area under the raised carriage deck.

- Work must be performed by qualified maintenance technicians.
  - ◊ ASME B20.1-2015 defines a qualified person as "A person who, by possession of recognized degree or certificate of professional standing or by extensive knowledge, training, and experience, has successfully demonstrated his/her ability to solve problems relating to the subject matter and work."
- The facility has performed a Risk Assessment per ASME B20.1-2015 5.16
  - ◊ Reference OSHA 3071 for Job Hazard Analysis
  - ◊ Reference CEMA Technical Report 2015-01, ASSE Z590.3, and MIL-STD-882 for Risk Assessment examples.
- A proper Lockout/Tagout (LOTO) procedure has been performed on the VRC.
  - ◊ Refer to ANSI/ASSE Z244.1-2003 (R2014), Control of Hazardous Energy — Lockout/Tagout and Alternative Methods, and OSHA Standard 29 CFR 1910.147, The Control of Hazardous Energy (Lockout/Tagout).
- At least two (2) means of support are used to secure the raised platform.
  - ◊ The lifting systems can be used as one means of support provided that no work is to be done on the hydraulic system or mechanical drive system and an appropriate LOTO has been performed on the VRC.
  - ◊ Additional means of support include adequately sized maintenance chains, maintenance pins, DeckLocks, or straps with shackles around the drivebase that are capable of supporting the weight of the carriage.

Minimize the Hazards

Every employee must be aware of the hazards before entering the area under a raised carriage. Take appropriate steps to minimize these hazards and any others that are identified. Some of the more common hazards are:

- Inadequate refuge space
- Confined space
- Improper air quality
- Inadequate lighting
- Improper access
- Tripping hazards
- Unsafe or lack of pit ladders
- The presence of moisture/water/oil
- Moving equipment

General Guidelines

- Where a VRC is operating in a multiple unit hoistway, that portion of the hoistway where the work is to be performed shall be fully separated or accessible equipment locked out.
- Do not work in a pit with standing water.
- Ensure that all portable lights and tools are connected through a Ground Fault Circuit Interrupter (GFCI).
- Provide adequate lighting especially if in a shaftway.
- For a deep pit, never "jump" into the pit – always use a ladder.
- Use proper hand protection while cleaning the area beneath a raised carriage.
- Do not leave parts, lubricants, cleaning equipment, etc in the pit.
- Do not stand on the hydraulic piping or electrical conduit.
- Never straddle over the traveling cable(s) if so equipped and protect it against damage.

PFLOW INDUSTRIES MATERIAL HANDLING SOLUTIONS
www.pflow.com
P 414 352 9000
F 414 352 9002
6720 N. Teutonia Ave.
Milwaukee, WI 53209

Pit Access

Access to the area beneath the raised carriage deck can be gained through manual measures implemented by qualified maintenance technicians or automatically through the use of a factory supplied option known as maintenance mode.

Manual Access

1. Call the carriage to the lower level.
2. Open the lower gate and bypass the gate open switch at the interlock or in the main control panel. If there is any confusion about how to do this, call the PFlow Industries, Inc. Product Support Department.
3. Barricade the lower level gate opening to prevent unintended access and provide hazard warning signs.
4. Verify that the carriage is empty. Raise the carriage to the upper level making sure all personnel are clear of the moving carriage.
5. Lockout the lift in accordance with the facility Lockout/Tagout program.
6. Secure the carriage at the upper level using adequately sized maintenance chains, maintenance pins, DeckLocks, or straps with shackles around the drivebase that are capable of supporting the weight of the carriage to provide additional safety.
7. After the carriage is secured, barricade the upper level gate to prevent anyone from entering the carriage while someone is working underneath.

NOTICE

Do not attempt to do any work on the lifting system (e.g., hydraulic system, motor drive). When work is to be done on the hydraulic system or mechanical drive system, a different procedure must be followed. The carriage must be landed on stands or secured by another means in order to prevent any weight from relying on the lifting means or when the hydraulic pressure is fully relieved. Consult Factory.

8. Return to the lower level and verify that the gate and the carriage does not move if the push-buttons are pressed. Wedge or block the lower level gate in the open position to prevent the gate from closing while someone is in the pit area.
9. Perform the necessary maintenance, adjustments, or cleaning under the carriage.
10. Exit the pit and remove the wedge or block holding the lower level gate open.
11. Reverse the process to return the VRC into service.

Automatic Access - Maintenance Mode with DeckLocks (if provided with the VRC)

1. Operator turns the key to Maintenance Mode (if any gate is open the Maintenance Mode light flashes to alert the operator to close the gate).
2. Call/Send stations are deactivated at this time.
3. Once gates are closed, the carriage travels to the upper level and stops.
4. The DeckLocks extend under the carriage structure, and the carriage comes down to rest on the DeckLocks.
5. The DeckLocks are proofed in position and the “Maintenance Locks Secure” green light is illuminated.
6. Proper facility Lockout/Tagout procedures must be followed prior to lift maintenance.
7. Access is allowed to authorized maintenance personnel through the level 1 gate.

MATERIAL HANDLING SOLUTIONS
www.pflow.com
P 414 352 9000
F 414 352 9002
6720 N. Teutonia Ave.
Milwaukee, WI 53209

Unique Descriptions and Names

PFlow Industries, Inc. has incorporated, as well as created, a number of unique descriptions, names, and terminology for parts, components, and devices included in the Vertical Reciprocating Conveyor (VRC). This glossary includes these unique terms and other common terms to help understand this manual and the information it contains. In addition, the glossary will aid the user in communicating the correct information during troubleshooting and service situations. Although the wording and descriptions may sound familiar to the person who has read the manual, other terms and descriptions might not. It is recommended by PFlow Industries, Inc. that this glossary be reviewed before reading the remainder of this manual.

Alkyd paint	A fast-drying enamel paint, color-mixed per the customer's request, and applied using standard methods as specified by the paint manufacturer.
ANSI	American National Standards Institute: www.ansi.org
ASME	American Society of Mechanical Engineers: www.asme.org
Authorized person	Trained or qualified personnel approved to perform a specific duty or duties.
Back-frame	The vertical portions of the carriage on a cantilever VRC, typically a series D vertical support mast.
Backstop panel	Also known as a Mezzanine roll-off panel, this is a panel that is installed opposite the loading edge at upper loading levels of a VRC platform that does not penetrate a floor. The backstop panel helps protect personnel and/or products from falling off the platform when loading or unloading. This term should not be confused with the term "backstop" as defined in ASME B20.1.
Backstop	As defined by ASME B20.1; A mechanical device to prevent reversal of a loaded conveyor under action of gravity when forward travel is interrupted.
BVAC	A bi-panel vertical acting gate.
Cantilever	A style of VRC where the carriage rides along the guide columns that are located on the same side of the carriage. This style lift can accommodate loading on three sides; right, front, and left.
Capacity	The maximum load for which the VRC is designed.
Carriage	The entire structural assembly that travels on the guide columns and carries the load.
Carriage gate	A gate that is mounted directly on the carriage deck.
CEMA	Conveyor Equipment Manufacturers Association: www.cemanet.org
Chain	See Drive chain, Lift chain and Roller chain.

MATERIAL HANDLING SOLUTIONS
www.pflow.com
P 414 352 9000
F 414 352 9002
6720 N. Teutonia Ave.
Milwaukee, WI 53209

Chain Driven Live Roller (CDLR)	A horizontal conveyor that is driven by separate loops of chain or a continuous chain. The chain contacts all roller sprockets, depending on the type and function of the horizontal conveyor. Either double or single sprockets are fitted to the horizontal conveyor rollers.
Chain Guide Tube	A tube welded to the back side of the VRC column that encloses the lift chain and tensioner chain.
Chain tensioner	A device that monitors the lift chain tension. If the lift chain is too tight, becomes slack, or breaks, the limit switch mounted on the chain tensioner will trip and remove control power.
Columns	The vertical structural members in which the wheelblocks attached to the carriage travel up and/or down.
Column splice	Columns shipped in more than one piece must be joined in the field during installation. Field assembly and welding is required.
Constant Pressure Push Button	A push button which must remain pressed and maintained by the operator in order to perform a desired operation. If the push button is released, the desired operation will stop.
Controls	Any combination of electrical devices used to control the operation of a VRC. This normally includes push buttons, relays, limit switches, interlocks, etc.
Control Panel	An enclosure housing various electrical components that control the VRC.
Control voltage	The control voltage is typically provided by the control transformer and is used to energize the various low voltage electrical devices.
Conveyor, Vertical Reciprocating	See Vertical Reciprocating Conveyor (VRC).
Dead load	A static load that is a permanent force, acting on a structure (see Platform).
Deck	The floor of the carriage (can be smooth plate, tread plate, or open).
DeckLock System	An added measure of safety to prevent uncontrolled descent of the carriage.
Diagonal drop bar	Load-defining bar and snap chain across operating end(s) of the carriage to define the load area on the platform which may minimize load movement. The diagonal drop bar is hinged at the base and swings down. This is not a load stop.
Direct acting cylinder	The cylinder which transmits lifting force directly to the carriage rather than through the use of cables, pulley, or chains.
Drivebase assembly	Gear reducer, brake motor and mechanical components that power the chain that lifts and lowers the carriage for mechanical VRCs. This assembly is typically mounted at the top of the lift guide columns.

PFLOW INDUSTRIES MATERIAL HANDLING SOLUTIONS
www.pflow.com
P 414 352 9000
F 414 352 9002
6720 N. Teutonia Ave.
Milwaukee, WI 53209

Drive chain	Drive chains on the F series mechanical VRC, through a series of a shaft and sprockets allow the carriage to be raised and lowered.
Drift	The action of a lift carriage slowly dropping, usually due to slight internal leaks in a hydraulic system or mechanical slippage of a motor brake.
EBVAC	An electrically powered bi-panel vertical acting gate.
Effective width/ length	Refers to usable space for the materials load on the carriage, not the overall dimensions which includes space allowed for carriage side guards and snap chains.
Electrical cable	Electrical cables consist of at least two conductors contained within a protective outer cover.
Enclosure (lift guarding)	Structure surrounding a VRC to prevent outside interference with its normal operation and to safeguard personnel. Typically 8' (2438mm) high panels composed of expanded metal or other materials that will prevent a 2" (51mm) diameter ball from passing through (ASME B20.1 requirement).
Epoxy coating	Abrasion-resistant, two-part industrial-strength protective coating system applied over sandblasted and primed steel or direct to metal. The epoxy coating is ideal for outdoor, chemical, or caustic wash-down environments or applications where standard alkyd enamel is viewed as insufficient.
EVAC	An electrically powered single panel vertical acting gate.
Expanded metal (EM)	A sheet of metal uniformly slit and stretched, forming diamond-shaped openings in the metal sheet. Expanded metal is a one piece construction that will not unravel under normal circumstances and will hold its shape. Expanded metal comes in a standard (raised) or flattened diamond pattern in a variety of gauges, opening sizes, materials and sheet sizes.
Explosion proof (EXP)	Electrical devices (e.g., control panels, motors, limit switches) that are designed to operate safely in a specific location or area where potentially explosive environments can or do exist.
Floor-to-Floor distance	The distance from one operating floor level to the adjacent operating floor level (see Vertical travel).
Full Height Enclosures (FHE)	Structure surrounding the full height of a VRC to prevent outside interference with its normal operation and to safeguard personnel. Typically panels composed of expanded metal or other materials that will prevent a 2" (51mm) diameter ball from passing through (ASME B20.1 requirement).
Gate	A device that opens and closes manually or automatically to allow access to the carriage for loading and unloading. The gate is normally a swing, sliding, or vertical acting device constructed of similar expanded metal as the enclosure (see specific gate type).

MATERIAL HANDLING SOLUTIONS
www.pflow.com
P 414 352 9000
F 414 352 9002
6720 N. Teutonia Ave.
Milwaukee, WI 53209

General Arrangement (GA) drawing	The drawing produced by PFlow Industries, Inc. which shows the VRC lift, gates, and enclosures. The drawing may show but does not specify building details.
Guarded by location	Describes moving parts so protected by the parts remoteness from the floor, platform, walkway, or other working level, or by the parts location with reference to the frame, foundation, or structure to reduce the foreseeable risk of accidental contact by persons or objects. The parts remoteness from foreseeable, regular, or frequent presence of public or employed personnel may constitute guarding by location in reasonable circumstances. (See ASME B20.1 standard)
Guide angles	Guide angles are attached to the guide column to help capture and contain the guide wheels in the columns and guide the carriage.
Guide column	The structural members connected to the carriage that guide the carriage travel up and down.
Header	Header refers to the horizontal structure spanning the width of the carriage or gate. The carriage header defines the load height on straddle units.
HMI (Human Machine Interface)	The user interface in the control system that provides graphic control of the VRC. The HMI communicates with the programmable logic controller (PLC).
Hollow shaft	VRC mechanical shaft of the mechanical drivebase which penetrates the gear motor rather than coupling to the gear motor. This minimizes wear points.
Hydraulic cylinder	A device which converts fluid power into linear force and motion. The hydraulic cylinder usually consists of a movable element such as a piston and piston rod, plunger or ram, operating within a cylindrical bore.
Hydraulic power unit	Refers to motor, pump, and reservoir assembly. The reservoir is shipped with oil. Most hydraulic power units come with the control panel attached and pre-wired to the hydraulic pump.
Incoming voltage	The main voltage being supplied for operation of the equipment.
Interlock (Gate/ Door)	An electro-mechanical locking system used on the gates or access doors of a VRC. The system prevents the VRC operation unless all such gates or access doors are closed. The system also prevents the opening of any such gate or access door unless the VRC carriage is present at that particular landing or opening.
Intermediate level	A floor level or levels between the uppermost and bottommost operating floor.
Junction box	An electrical control box used to join, centralize, and distribute wiring from different locations.
Keylock control	A keyed push button station that prevents unauthorized use of the VRC.
Kick plate	A curb on the outermost edge of the inoperable sides of the carriage deck which is designed to contain product and is a minimum of 4" (102mm) high.
Knock-down (KD)	Lift components shipped in two or more pieces. Typically field welding is required (e.g., KD carriage, KD headers, KD uprights, KD gates, etc.).

MATERIAL HANDLING SOLUTIONS
www.pflow.com
P 414 352 9000
F 414 352 9002
6720 N. Teutonia Ave.
Milwaukee, WI 53209

Landing	A permanent-working surface at a fixed elevation used for loading or unloading the carriage.
Lift chain	A chain that lifts the carriage and load.
Lift location light	Illuminated push button that indicates at which level the carriage is located.
Lifted load	The total weight that the VRC is designed to lift at a specific speed. Typically, this is the dead load plus live load (see Rated load).
Limit switch	An electrical device which is used to control the carriage position and monitor various mechanical devices.
Load pattern	A method to describe the direction a load can be moved on and off a carriage at different operating floors or levels. These can be used in combinations. ● **"C" load pattern:** Carriage configuration allowing a load/unload opening on one side of the carriage deck. ● **"Z" load pattern:** Carriage configuration allowing a load/unload opening on opposite sides of carriage deck. ● **"90 degree" load pattern:** Carriage configuration allowing a load/unload openings at right angles on the carriage deck.
Load test	The carriage is loaded to rated capacity, and the lift is operated.
Macropoxy	Macropoxy is a fast drying, polyamide epoxy designed to protect steel in industrial exposures. Ideal for protection of sharp edges, corners, and welds.
Mechanical stop	A mechanical means of stopping travel at a fixed position.
Momentary contact push button	A push button which only has to be pressed for an instant to activate the desired operation.
Non-operating end	The side(s) of a carriage not used for loading/unloading. Handrails or expanded metal sides and kick plate are normally supplied as minimum guarding.
Operating end	The side(s) of the carriage used for loading/unloading. At a minimum the side(s) are normally equipped with a safety chain as guarding.
Overall dimension	The outside dimension of the carriage structure or the entire lift.
Overtravel limit switch	A safety device provided on mechanical VRCs to stop carriage travel beyond the uppermost or lowermost floor level if the floor level positioning limit switch fails.
Photo eye	Photoelectric sensor that uses a focused beam of light to span the distance to a reflector. The VRC controls receive a signal when the reflected bean of light is detected by a sensor.
Pit	A depression in the floor a minimum of 1" (25mm) deeper than the carriage profile, which allows the carriage deck to be flush at operating floor or level.
Platform	The structure that forms the floor of the carriage and that directly supports the load (see Deck).
Pneumatic gate operator	A device that requires in-plant, clean and dry air to automatically open and close a gate. The device can be operated by either manually through the use of pull cords or push buttons, or automatically through the use of a PLC.

MATERIAL HANDLING SOLUTIONS
www.pflow.com
P 414 352 9000
F 414 352 9002
6720 N. Teutonia Ave.
Milwaukee, WI 53209

Pressure switch (hydraulic)	A sensor which detects hydraulic pressure. The sensor can be set to trip at a predetermined pressure. When this pressure setting is reached, the pressure switch will activate, opening the control circuit and stopping the pump motor.
Programmable Logic Controller (PLC)	A micro-processor based device that controls the VRC or Cartveyor™ through a resident software program.
Push-button (PB) station	The wall mounted, pedestal mounted, or hand held device used to control the operation of the VRC.
Qualified person	A person, who by possession of a recognized degree, certificate, professional standing, or skill, and who by knowledge, training and experience, has demonstrated the ability to deal with problems relating to the subject matter, the work, or the project.
Ramp	An access ramp used to load on and off of a carriage deck.
Rated load	The load the VRC is designed for and installed to lift at a rated speed (see Lifted load).
Reflector	A plastic, prismatic object used to reflect a beam of light emitted from a photoelectric sensor.
Roll-off panel	See Back-stop panel.
Roller chain	The type of chain drive most commonly used for transmission of mechanical power. The roller chain consists of a series of short cylindrical rollers held together by side links and connecting pins. The roller chain is driven by a toothed wheel called a sprocket.
Safety cam	Spring-loaded, hardened steel cam directly attached to the lift chain or gate chain that engages if the lift chain or gate chain breaks or slackens, preventing the carriage or gate panel from dropping more than a few inches.
Side guards	A protective enclosure on the outermost edge of the inoperable sides of the deck welded to the carriage to contain load. Can be rails, sheet steel, or expanded metal.
Slack chain device	A device that monitors a chain and trips if the chain goes slack. If the chain becomes slack or breaks, the limit switch mounted on the slack chain device will trip and remove power to the circuit.

PFLOW INDUSTRIES MATERIAL HANDLING SOLUTIONS
www.pflow.com
P 414 352 9000
F 414 352 9002
6720 N. Teutonia Ave.
Milwaukee, WI 53209

Spliced guide column	Guide column that is fabricated and delivered in two or more sections necessitated by manufacturing, handling, or installation constraints.
Sprocket	A wheel typically mounted on a shaft. The wheel has a row of teeth around its edge that fit into the links of a chain.
Straddle	A style of VRC where the carriage rides between two guide columns that are located on opposite sides of the carriage. This style of lift will accommodate "C" and "Z" type loading patterns.
Top of roller (TOR)	Top elevation of a horizontal conveyor system roller which is also the lower elevation of the load.
Touchscreen	See HMI.
Transom	A panel or panels used to close an enclosure opening above the VRC entrance.
Travel	The difference in elevation between the bottommost level of the carriage platform and the uppermost level of the carriage platform, regardless of whether the carriage is pit or floor mounted.
UHMW (Ultra-High Molecular Weight)	An abrasion-resistant, high-impact, polyethylene material used throughout the VRC to protect and/or guide moving parts.
Uprights	The portion of the carriage that houses the wheels that guide the carriage between the columns.
VAC	A single panel vertical acting gate.
VFD (Variable-Frequency Drive)	A VFD is a type of drive used in electro-mechanical drive systems to control AC motor speed and torque by varying the motor frequency and voltage.
Velocity fuse	A device that senses hydraulic flow across a control orifice when the pressure differential exceeds a predetermined amount. A spring-biased poppet closes, shutting flow to the damaged hydraulic circuit and prevents the lift carriage from descending.
Vertical travel	Distance the carriage deck travels; floor-to-floor or total distance (see Travel).
Vertical Reciprocating Conveyor (VRC)	A reciprocating power actuated lifting device (not designed to carry passengers or an operator) that receives loads on a carriage and transports these objects from one operating elevation to another.
VRC specification sheet	PFlow Industries, Inc. informational data sheet providing general information on a specific VRC.
Wheelblock assembly	Sub-assembly fastened to the carriage upright that contains the guide roller elements and safety cam for the chain driven VRC lift. The lift chain is typically attached to the wheelblock assembly safety cam.

MATERIAL HANDLING SOLUTIONS
www.pflow.com
P 414 352 9000
F 414 352 9002
6720 N. Teutonia Ave.
Milwaukee, WI 53209

Gate Types:

Single swing gate	This type of gate hinges on one side and latches on the other, may be either right or left-hand swing. Clear space is required in front of the VRC for the gate to swing open.
Bi-parting swing gate	The bi-parting, swing gate has hinges on each side and latches in the center. Clear space is required in front of the VRC for the gates to swing open.
Single panel vertical acting gate (VAC)	The VAC gate panel closes to the floor and opens in the upward direction.
Double panel vertical acting gate (BVAC)	The BVAC gate is the same as the single panel VAC above in operation and use except the two (2) panels telescope from a nested position.
Horizontal sliding gate	The horizontal sliding gate operates in the same manner as a vertical acting gate except the gate functions in the horizontal direction.
Roll-up door	The roll-up door can be anything from an industrial type roll-up steel door to self-storage facility type door.

MATERIAL HANDLING SOLUTIONS
www.pflow.com
P 414 352 9000
F 414 352 9002
6720 N. Teutonia Ave.
Milwaukee, WI 53209

21 Series Straddle

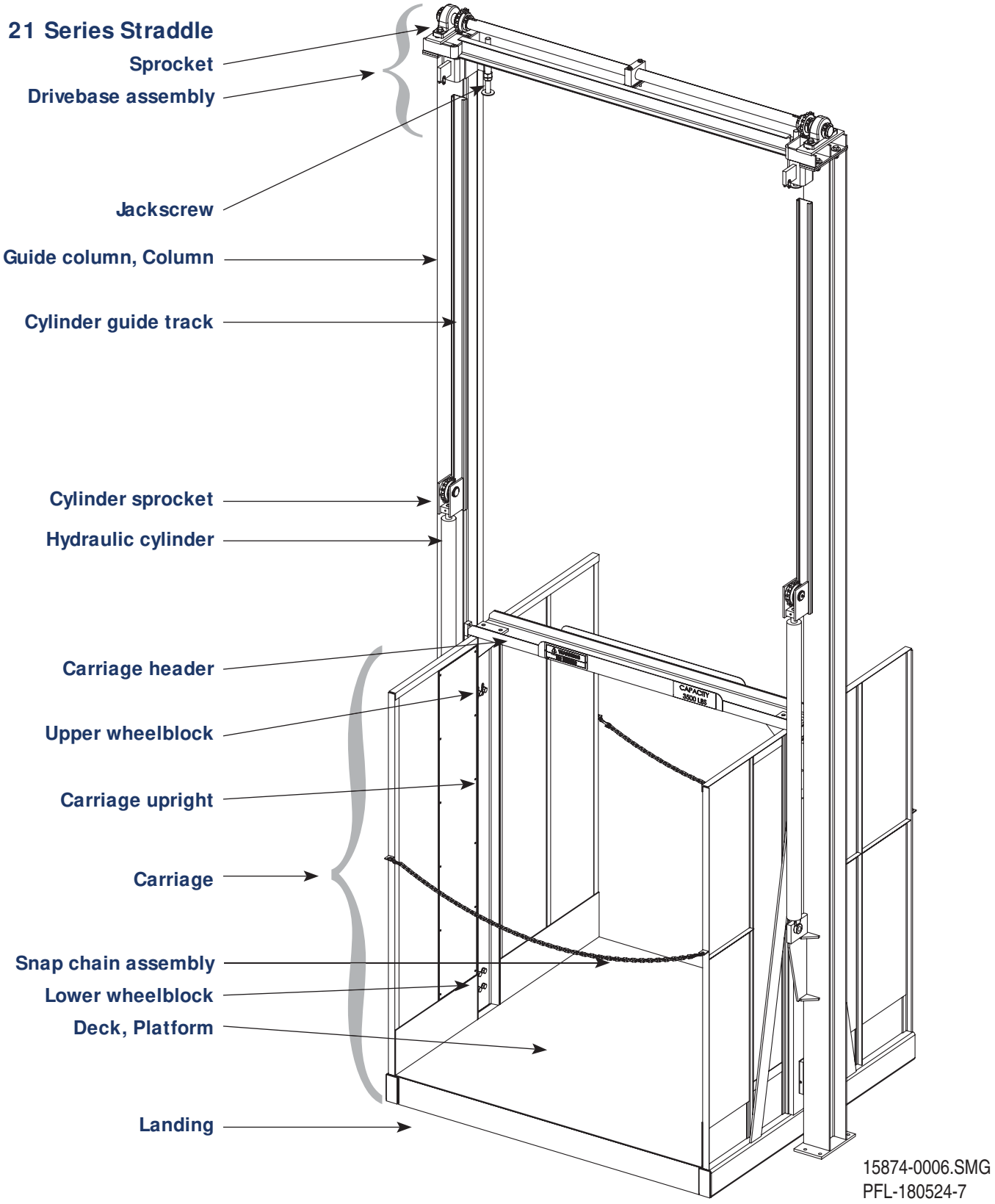

MATERIAL HANDLING SOLUTIONS
www.pflow.com
P 414 352 9000
F 414 352 9002
6720 N. Teutonia Ave.
Milwaukee, WI 53209

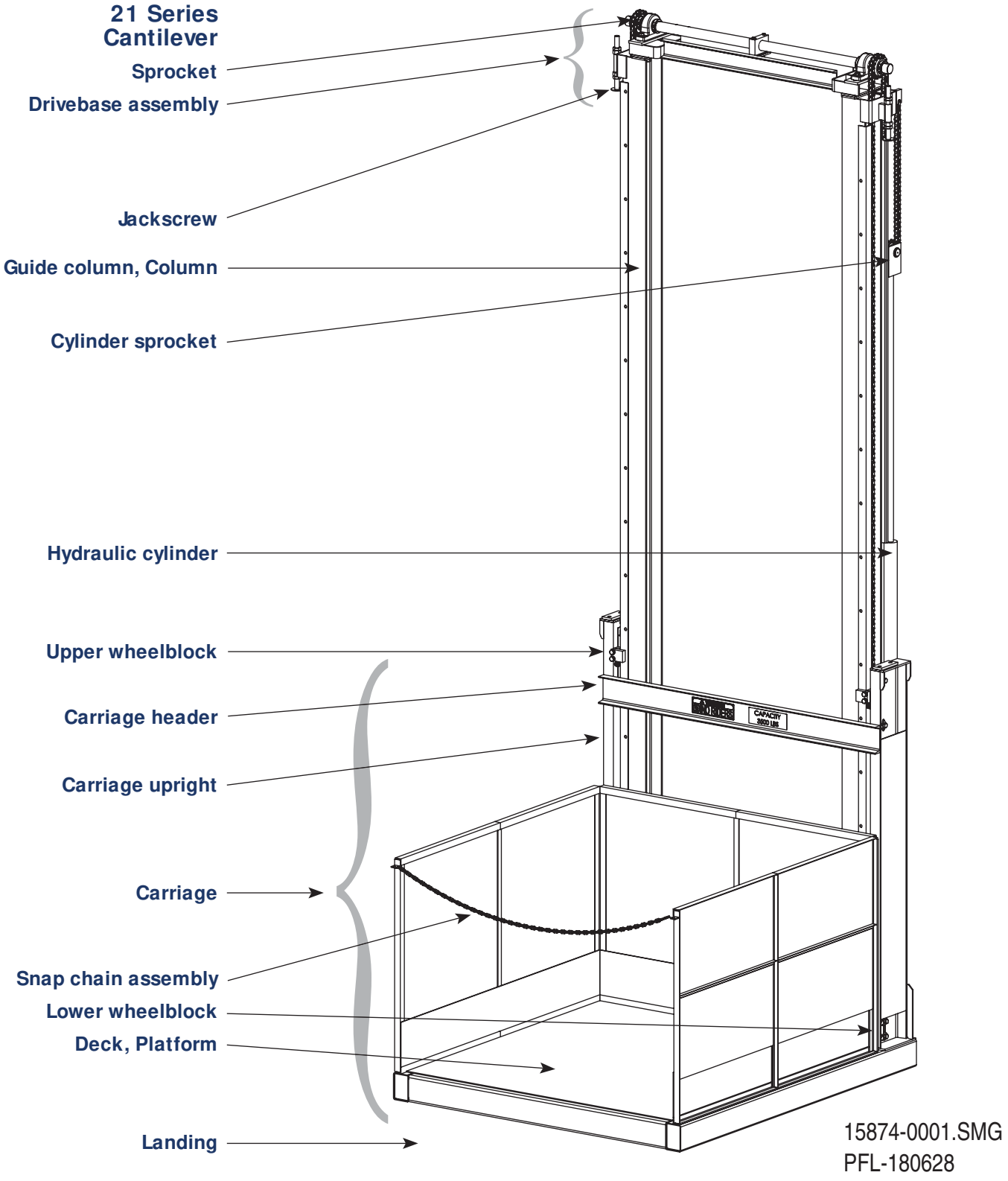

PFLOW INDUSTRIES MATERIAL HANDLING SOLUTIONS
www.pflow.com
P 414 352 9000
F 414 352 9002
6720 N. Teutonia Ave.
Milwaukee, WI 53209

Field Electrical Wiring Standards

All electrical wiring and craftsmanship completed in the field shall be in accordance with existing state, local and National Electrical Code (NEC) standards.

Definitions

In-field electrical wiring: All hard wiring of all electrical devices external of control panel.

Control circuit: The control circuit refers to all circuits and devices at 120 VAC and below.

Power circuit: Power circuit refers to all circuits and devices at 208 VAC and above.

Systems: Systems refers to automated vertical and horizontal conveyors.

Requirements

1. It is recommended that all control circuit wiring is #14 AWG, copper, stranded, type THHN or equal, 600 VAC.
2. It is required that all power circuit wiring is #12 AWG minimum (sized appropriately for the load), copper, stranded, type THHN or equal. A green grounding wire shall be provided to power devices.
3. Per NFPA 79, the colors of individual conductors shall be:

Power wiring - Black	24 VAC neutral - White
115 VAC - Red	24 DC - Blue
115 VAC neutral - White	0VDC - White/blue
24 VAC - Red/black	Ground - Green or green/yellow

   Note: These colors only apply to individual conductors. These colors do not apply to prefabricated cables.
4. All wires must be labeled on each end with the wire number from the electrical drawing using a machine or computer generated label, utilizing black characters on a white background.
5. All field devices must be individually terminated in the control panel.
6. Screw on solderless connectors (wire nuts) shall be of the insulated type, spring lock, and of the proper size to accommodate wires.
7. Terminal lugs shall be of the insulated type, crimp style, and of the proper size to accommodate wire(s) and terminal fasteners.
8. Conduit and related hardware shall conform to local, state, and NEC standards. The minimum size shall be 1/2". Connectors and couplings shall be appropriate for conduit type.
9. Flexible conduit shall be a minimum of 1/2", shall be of the liquid-tight type, and shall be installed with compatible liquid-tight connectors.
10. The customer shall locate and install a fused disconnect switch within the line of sight of the control panel. The customer shall ensure accessibility to the disconnect switch with regard to existing electrical codes and standards.
11. Control wiring and conduit shall be separate from the power wiring and conduit.
12. Drop cords (flexible cords) shall be multi-conductor festoon-type cable where applicable.

PFLOW INDUSTRIES MATERIAL HANDLING SOLUTIONS
www.pflow.com
P 414 352 9000
F 414 352 9002
6720 N. Teutonia Ave.
Milwaukee, WI 53209

Electrical Ruling Bodies

NEMA	***National Electrical Manufacturers Association*** provides national testing and manufacturing standards body of electrical apparatus.
UL	***Underwriters Laboratories, Inc.*** is an independent testing laboratory. Many local codes require UL control panels and electrical apparatus.
JIC	***Joint Industry Council*** is an advisory group that provides standards for production equipment, safety, and dependability.
NFPA	***National Fire Protection Association*** is the ruling board of NEC and sets national fire and safety standards for equipment and manufacturing facilities.
CSA	***Canadian Standards Association*** is a regulatory agency of Canada.
ANSI	***American National Standards Institute*** oversees the creation, promulgation, and use of thousands of norms and guidelines that directly impact businesses.
ASME	***American Society of Mechanical Engineers*** is a leader in technical innovation with a focus on advancing and applying engineering knowledge and communicating the excitement of engineering. This group is the Secretariat for ANSI.
NEC	***National Electrical Code*** is an advisory board to NFPA with recommendations and codes usually adopted throughout the United States.

PFlow's Standard

NEMA 12 classification is to be used in a general purpose, indoor only application.

All PFlow Industries, Inc. control systems are built to a NEMA 12 minimum classification. All PFlow Industries, Inc. control systems conform to the following standards:

- ***NFPA 70 (NEC):*** The National Electrical Code.
- ***JNFPA 79:*** Electrical standard for industrial machinery.

Outdoor Application

Outdoor VRCs or electrical devices exposed to severe weather conditions should not be rated less than NEMA type 4. This is a watertight, dust-tight, indoor-outdoor classification that will provide protection against splashing water, seepage of water, falling or hose-directed water, and severe external condensation.

Corrosive Application

The chemical industry on the whole usually specifies a minimum NEMA type 4X. A NEMA 4X rating is similar to a NEMA 4 with added corrosion resistance.

MATERIAL HANDLING SOLUTIONS
www.pflow.com
P 414 352 9000
F 414 352 9002
6720 N. Teutonia Ave.
Milwaukee, WI 53209

PFlow's Standard (continued)

Hazardous Location

Hazardous locations are an extremely specialized electrical classification. Few electrical experts exist in this field. All hazardous locations must be handled as defined by the class, division, and group designator for the job site condition.

The NEC has three classes (I, II, III), - two divisions, (1 and 2) and seven group designations (A, B, C, D, E, F, and G).

Class Definitions

Class I locations: Locations in which flammable gases, flammable liquid-produced vapors, or combustible liquid-produced vapors are or may be present in the air in quantities sufficient to produce explosive or ignitable mixtures.

Class II locations: Locations that are hazardous because of the presence of combustible dust.

Class III locations: Locations that are hazardous because of the presence of easily ignitable fibers or where materials producing combustible flyings are handled, manufactured, or used, but in which such fibers/filings are not likely to be in suspension in the air in quantities sufficient to produce ignitable mixture.

Division Definitions

Division 1 is an extremely dangerous explosive condition that exists normally.

Division 2 is a dangerous explosive condition that could exist but usually does not.

Group Designations

Group designations are given by the NFPA, State Fire Marshals, insurance companies or consulting engineering firms according to the gasses, dust, or other particles in the area and the spark or temperature needed to produce an explosion.

MATERIAL HANDLING SOLUTIONS
www.pflow.com
P 414 352 9000
F 414 352 9002
6720 N. Teutonia Ave.
Milwaukee, WI 53209

MATERIAL HANDLING SOLUTIONS
www.pflow.com
P 414 352 9000
F 414 352 9002
6720 N. Teutonia Ave.
Milwaukee, WI 53209

Mechanical Overview

Each Series 21 (hydraulic) Vertical Reciprocating Conveyor (VRC) consists of two (2) columns, hydraulic pump and motor, hydraulic actuating mechanism, a moving carriage deck, enclosures, and if furnished, interlocked safety gates or doors. In addition, a main control panel and typically at least one push-button station per level are furnished. For more information on the electrical components, see Section 8 in this manual.

Lift Columns

The Series 21 consists of two (2) vertical upright columns. This is anchored to the floor at the lower floor level. positioned by the drivebase assembly at the top, and braced to the building structure at the upper and intermediate levels.

Straddle / Cantilever Configuration

There are two (2) configuration types available for this model. “Straddle” has a column located on each side of the carriage. The guide angles face each other allowing the carriage to ride between them. See Figure 7-1. “Cantilever” has both colums located at the back of the carriage. See Figure 7-2. There is no difference in the operation or maintenance between these models.

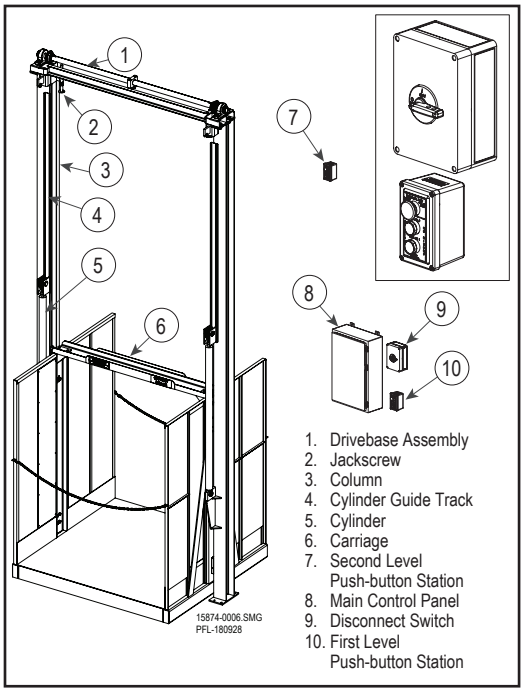

Straddle Orientation Figure 7-1

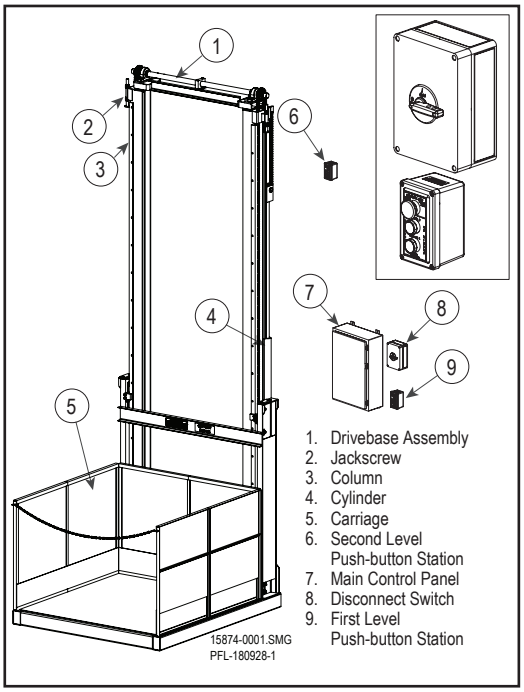

Cantilever Orientation Figure 7-2

MATERIAL HANDLING SOLUTIONS
www.pflow.com
P 414 352 9000
F 414 352 9002
6720 N. Teutonia Ave.
Milwaukee, WI 53209

Hydraulic Pump and Motor

The hydraulic pump and motor unit consists of a motor, gear pump, flow control valve, pressure switch, reservoir, air (breather) cap, oil filter, and an accumulator. See Figure 7-3.

Placement Considerations

Install the hydraulic pump and motor on a level, static, and solid foundation at the recommended floor level listed on the PFlow Industries, Inc. General Arrangement (GA) drawing.

Install the hydraulic pump and motor in a location that is easily accessible. The ability to service and inspect the hydraulic pump and motor is an important consideration in the life of the hydraulic system. The oil breather cap, manifold block, pressure gauge, pressure switch, and oil filter must be visible and accessible.

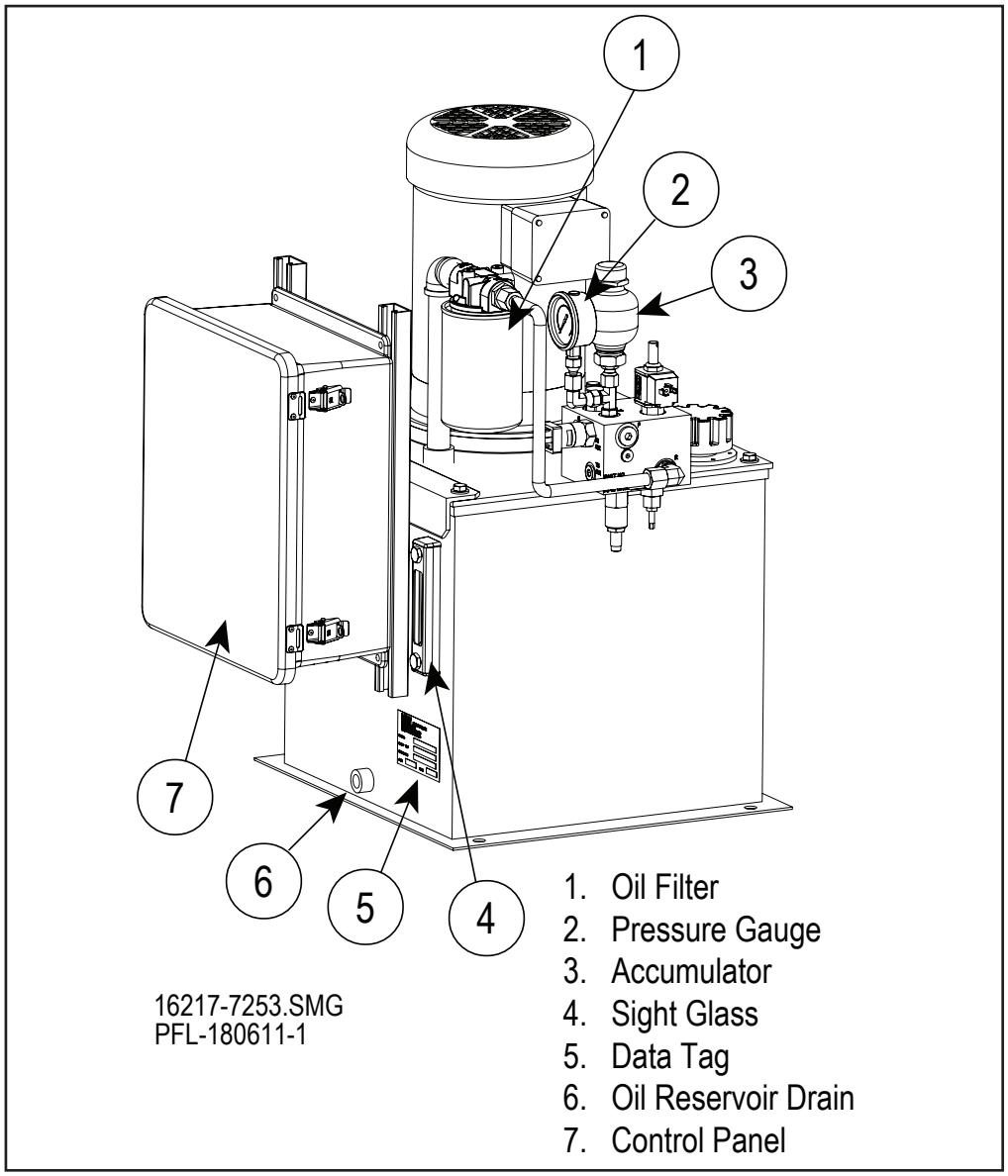

Hydraulic Pump and Motor Components
Figure 7-3

MATERIAL HANDLING SOLUTIONS
www.pflow.com
P 414 352 9000
F 414 352 9002
6720 N. Teutonia Ave.
Milwaukee, WI 53209

Wheelblocks

Wheelblocks are bolted to the carriage uprights. This allows the wheels to ride within the lift columns and guide the carriage travel. See Figure 7-4 and Figure 7-5.

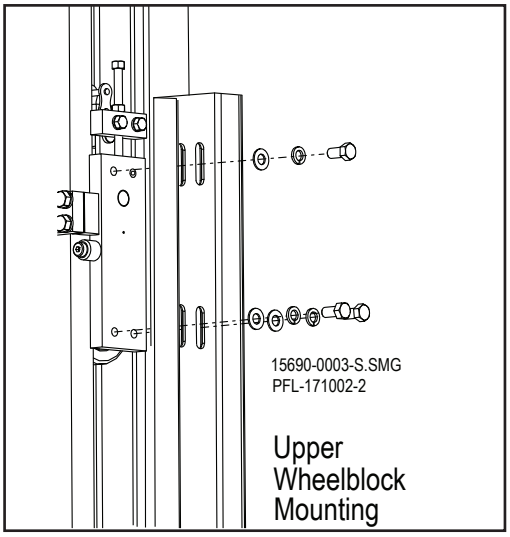

Upper Wheelblocks
Figure 7-4

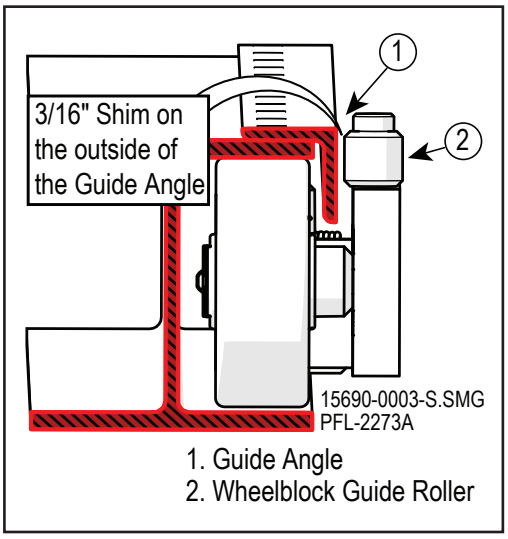

Wheelblock Placement
Figure 7-5

Mechanical Stop

Upward travel of the carriage is limited by two (2) positive mechanical stops (jackscrew assemblies). See Figure 7-6.

Hydraulic Cylinder

The hydraulic actuating mechanism is driven by two (2) cylinders. A cylinder is attached to each of the columns. When the cylinders extend, the carriage is pushed up.

Velocity Fuse

A velocity fuse prevents uncontrolled descent in the event of a hydraulic hose rupture. See Figure 7-7.

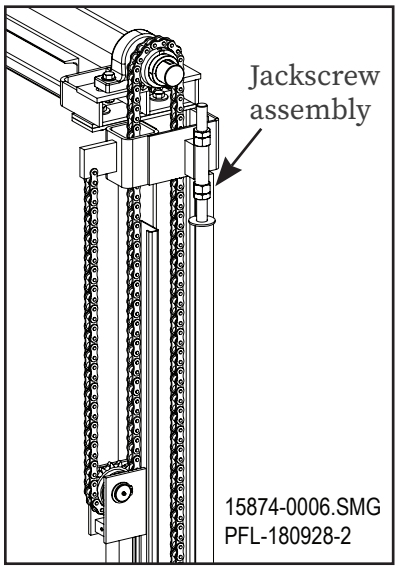

Figure 7-6

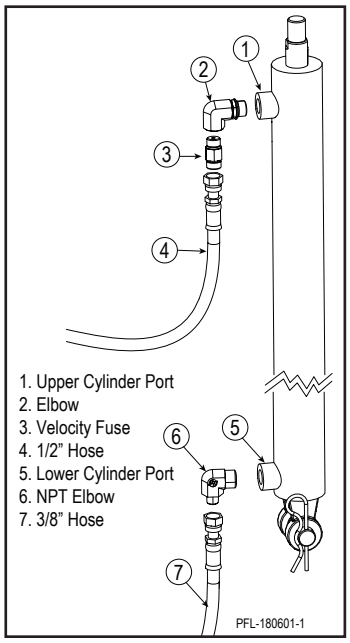

Hydraulic Hose
to Cylinder
Figure 7-7

MATERIAL HANDLING SOLUTIONS
www.pflow.com
P 414 352 9000
F 414 352 9002
6720 N. Teutonia Ave.
Milwaukee, WI 53209

Enclosures

In accordance with ASME B20.1-2015, Section I-3.9, PFlow Industries, Inc. supplies standard 8' (2438mm) tall enclosure panels to be installed around the Vertical Reciprocating Conveyor (VRC) as required by site conditions. The enclosure panels are steel with 1-1/2" (38mm) angle frame and 16 gauge flattened expanded metal designed to reject a ball 2" (51mm) in diameter. PFlow Industries, Inc. standard enclosure panels are typically 8' tall (2438mm). Full height enclosures (FHE) are furnished when designed for site specific requirements. See Figure 7-7.

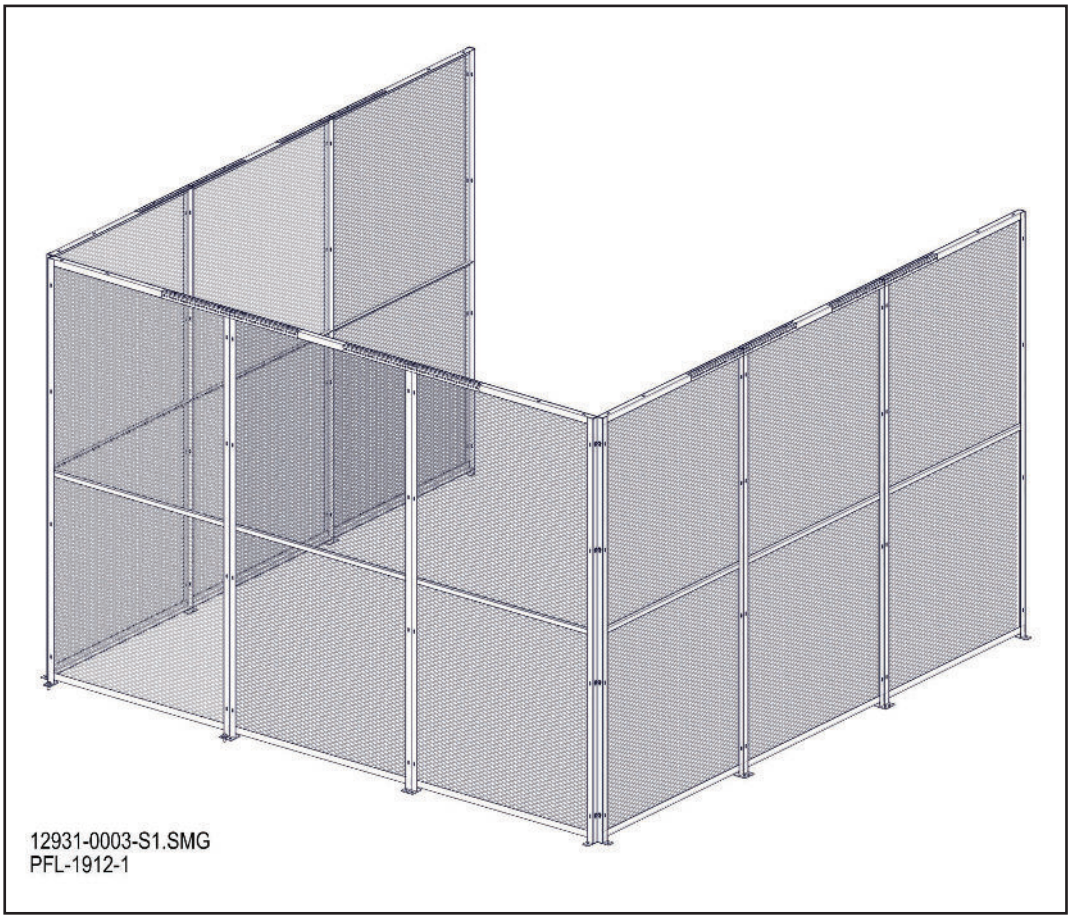

Floor Level Enclosures Figure 7-7

MATERIAL HANDLING SOLUTIONS
www.pflow.com
P 414 352 9000
F 414 352 9002
6720 N. Teutonia Ave.
Milwaukee, WI 53209

Gate Assemblies

A safety gate assembly or door is provided at each level opening accessing in the lift area. All gates and/or doors accessing the lift area are electromechanically interlocked. When a gate or door is open the interlock prevents movement of the carriage away from the respective level. When the carriage is not present at a level, opening the gate or door is prevented by the mechanical interlock. See Figure 7-8.

PFlow Industries, Inc. offers various styles of interlocks depending upon the gate type and application.

The parts section of this manual contains views with part numbers.

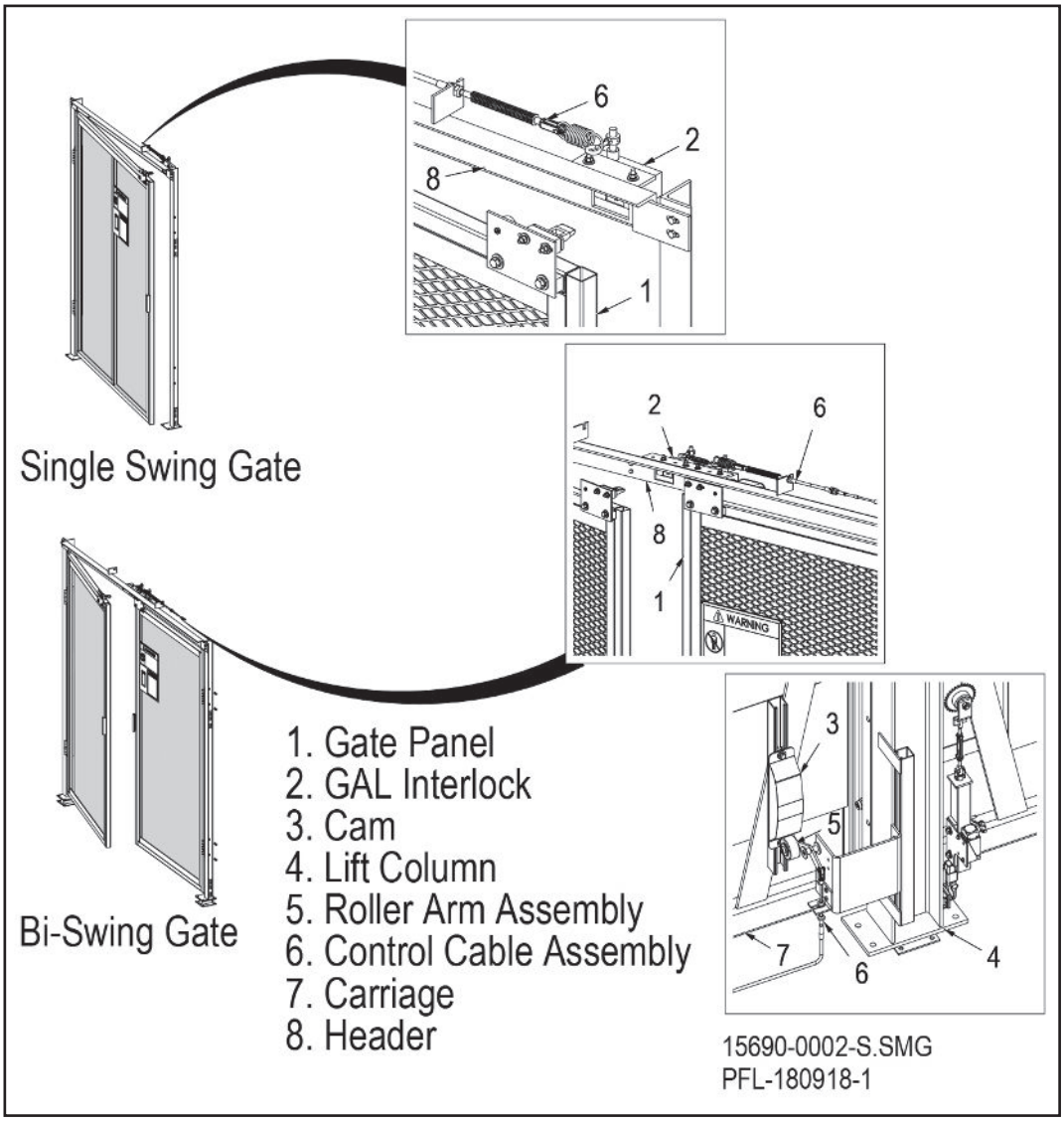

Swing Gate Interlock Examples
Figure 7-8

MATERIAL HANDLING SOLUTIONS
www.pflow.com
P 414 352 9000
F 414 352 9002
6720 N. Teutonia Ave.
Milwaukee, WI 53209

Examples

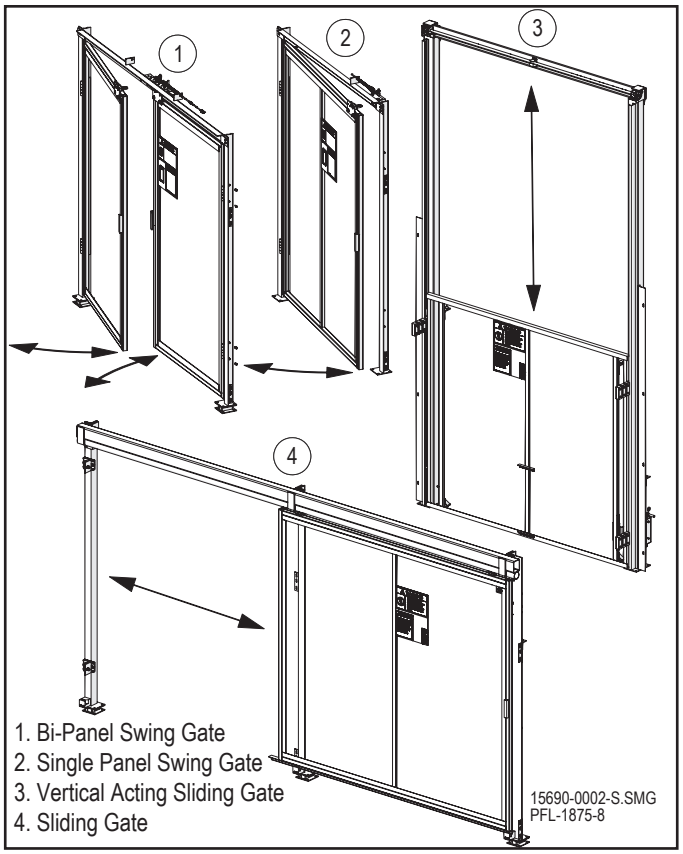

Gate Examples Figure 7-9

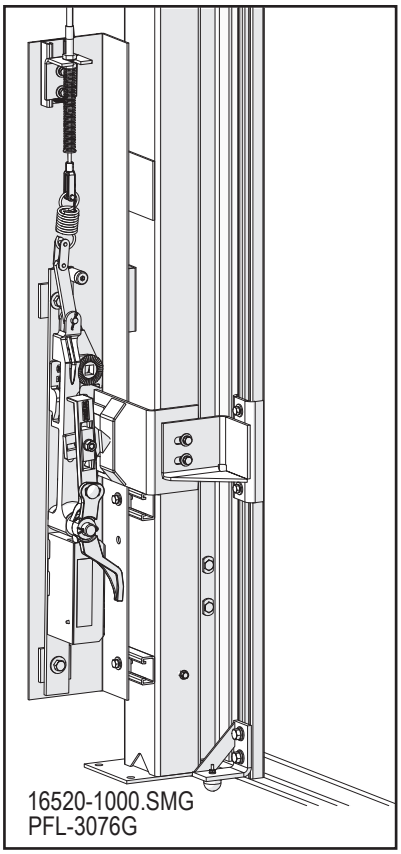

Peelle - VAC Figure 7-10

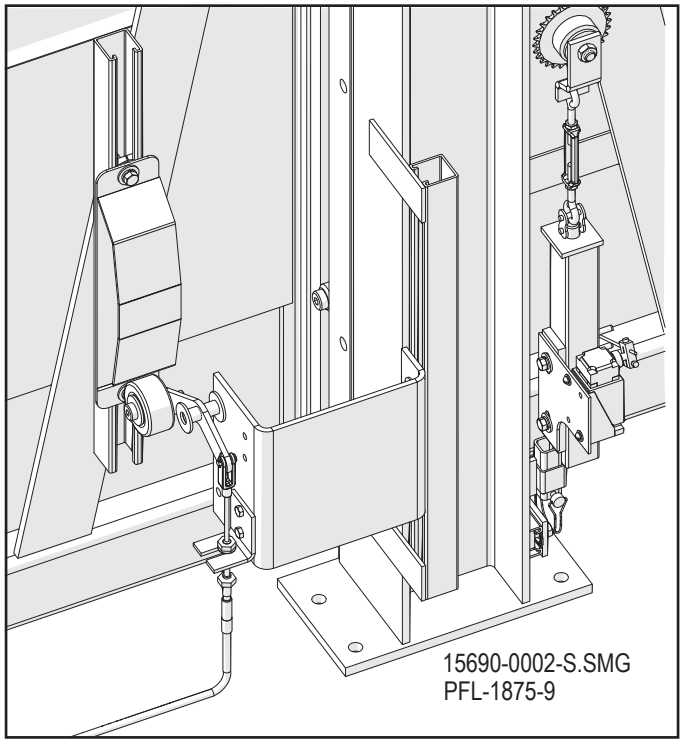

Cable Actuator Figure 7-11

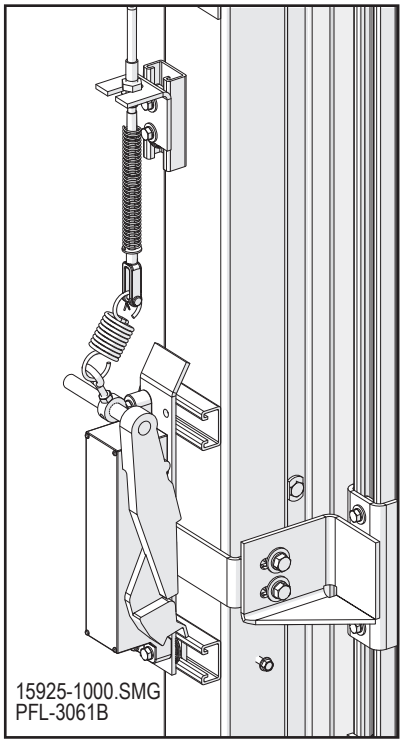

Anderson - VAC Figure 7-12

PFLOW INDUSTRIES MATERIAL HANDLING SOLUTIONS
www.pflow.com
P 414 352 9000
F 414 352 9002
6720 N. Teutonia Ave.
Milwaukee, WI 53209

Electrical Overview

The following is a standard description of the electrical wiring of an D series VRC. This does not include any specifics on options available or ordered (e.g., gates, DeckLocks, photo eyes). A copy of the electrical schematic can be found in the control panel and the shipping packet originally included in the parts crate.

⚠ WARNING

Falling hazard! Make sure all safety devices are in place and operable before using the equipment. If any safety device is missing or inoperable, immediately remove the equipment from service.

Per ASME B20, all gates or doors accessing the lift area must be electro-mechanically interlocked. This requires electrical contacts to prevent the lift from operating if a gate is open when the carriage is at the level and mechanical locks to lock the gate until the carriage is at that level.

NOTE *Different gate interlock types and styles are supplied depending upon the gate type and site conditions. Standard gate styles can incorporate one to four electrical components per gate.*

Main Control Panel

All electrical devices are connected individually to the main control panel. The main control panel contains a fused transformer, motor starter, relays, etc. A motor overload and current sensor is provided to protect the motor from excessive current draw. The timing relay is fixed and times the solenoid to lower the carriage to the first level.

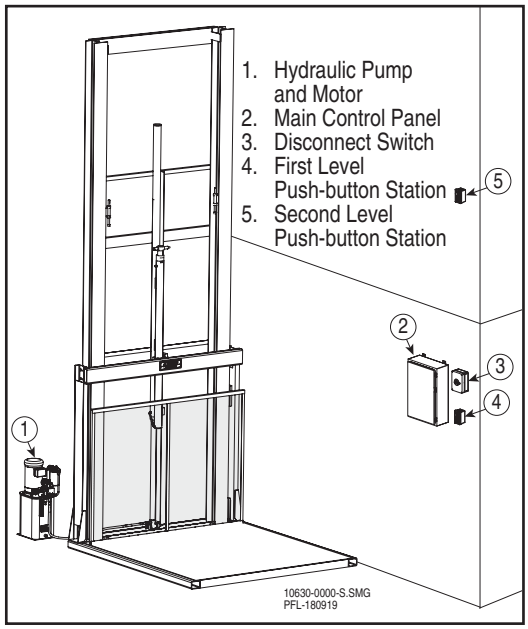

Electrical Components Figure 8-1

Push-button Stations

One push-button station is normally supplied for each level. AME B20.1 code requires that the push-button stations be remotely located and unable to be activated by someone standing on the carriage. Each push-button station contains Send to “x” push-buttons and an emergency stop (E-stop).

The Send to “x” push-buttons are momentary contact. This means the operator can press and release the Send to “x” push-button and the carriage will travel to the selected level. The operator does not need to hold the Send to “x” push-button for the carriage to continue moving. When pressed, the emergency stop prevents the carriage from moving. The emergency stop must be pulled out before carriage movement can be initiated again.

Main Disconnect Switch

As required by NEC code, the main disconnect switch must be lockable and located within line of sight of the control panel and no more than 6' 6" (1981mm) off the floor.

MATERIAL HANDLING SOLUTIONS
www.pflow.com
P 414 352 9000
F 414 352 9002
6720 N. Teutonia Ave.
Milwaukee, WI 53209

Hydraulic Pump and Motor

The pump and motor has three (3) electrical components: a motor, a pressure switch, and an electrically actuated valave. The motor must be located within 15' (4572mm) of the VRC. The motor wiring must be verified prior to energizing the VRC.

MATERIAL HANDLING SOLUTIONS
www.pflow.com
P 414 352 9000
F 414 352 9002
6720 N. Teutonia Ave.
Milwaukee, WI 53209

Before You Begin

Read this entire manual before operating the Vertical Reciprocating Conveyor (VRC).

Service must be performed by qualified and trained service technicians only.

NOTICE

ASME B20.1-2015 defines a qualified person as a person who, by possession of a recognized degree or certificate of professional standing, or by extensive knowledge, training, and experience, has successfully demonstrated his/her ability to solve problems relating to the subject matter and work.

Personnel to carry out work on the VRC must exclusively be qualified personnel who - based upon their education, experience, instructions as well as knowledge concerning relevant standards and provisions, accident prevention, regulations and operating conditions - have been authorized by the person being responsible for safety, to carry out the activities described in these instructions and who - when doing so - are in a position to recognize possible risks early and to avoid them.

⚠ DANGER

- Stay within the rated lift capacity.
- Make sure all safety devices are in place and operable before using the equipment. If any safety device is missing or inoperable, immediately remove the equipment from service.
- Falling hazard! Always make sure the carriage is present before walking through doorways.
- Keep clear of unsupported platforms. Stay out of the area under a raised platform. If a maintenance operation requires the carriage to remain in the raised position, refer to Bulletin 15709-0083 for additional information or contact PFlow Industries, Inc. Product Support Department for assistance.

⚠ WARNING

- Always return the carriage to the lowest level when the VRC is not in use.
- Passengers are not permitted. Riding may result in death or serious personal injury.
- Allow only competent adults who have been properly trained in the safe use of this equipment to operate it.
- This equipment can be dangerous if not used properly. Allow only properly trained and authorized personnel to operate this equipment.
- Close all gates and doors before the carriage is moved. Never leave the lift unattended with the gates or doors in the open position. Never close gates or doors when a person is on the carriage or within the fenced area.
- Place the load in the center of the lift platform to avoid shifting loads. Make sure that any portion of the load does not overhang the perimeter of the carriage. This could create an unstable load condition.
- Entanglement hazard! Secure long hair, wear snug-fitting clothing, and avoid wearing jewlery while using the VRC.

PFLOW INDUSTRIES MATERIAL HANDLING SOLUTIONS
www.pflow.com
P 414 352 9000
F 414 352 9002
6720 N. Teutonia Ave.
Milwaukee, WI 53209

Begin Sequence

1. Press the desired floor level button on the push-button station. See Figure 9-1. The coil in the motor starter magnetically closes the high voltage contacts and the power circuit to the motor starter. See Figure 9-2. This action turns the motor in the needed direction.
2. Two (2) enmeshed gears in the gear pump interact to lift the hydraulic fluid from the reservoir. The hydraulic fluid is forced past a line check valve into the hydraulic system. Control voltage to the motor starter coil pulls in the high voltage contact tips and allows the motor to turn in the desired direction.
3. High pressure hydraulic fluid travels through a flexible supply hose to the supply port at the top of each hydraulic cylinder. See Figure 9-3.
4. Fluid enters the hydraulic cylinders and acts against the piston causing it to retract. As the piston retracts, the clevis pulls down on the chains and causes the carriage to raise. See Figure 9-4.

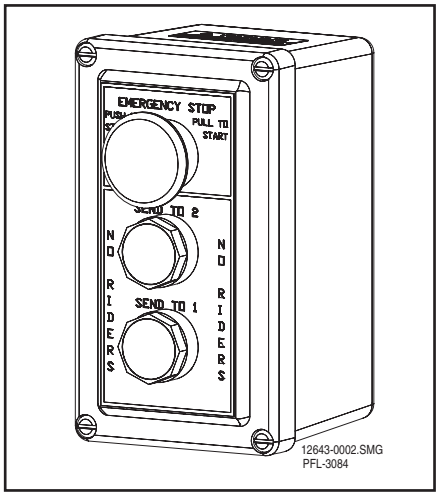

Push-button Station Figure 9-1

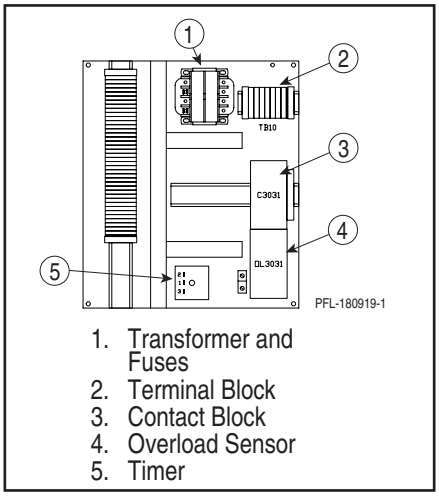

Control Panel Example Figure 9-2

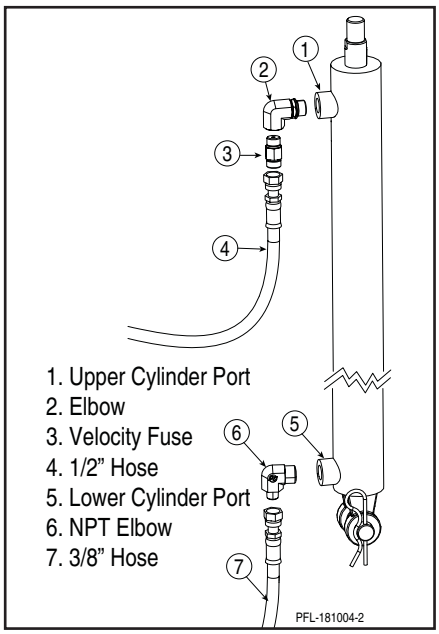

Supply Hose Figure 9-3

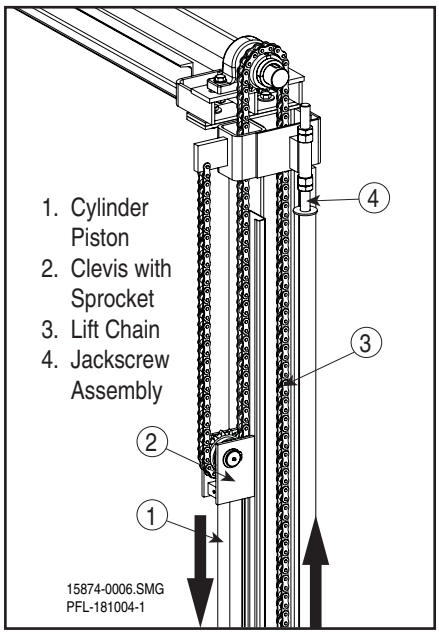

Carriage Movement Figure 9-4

MATERIAL HANDLING SOLUTIONS
www.pflow.com
P 414 352 9000
F 414 352 9002
6720 N. Teutonia Ave.
Milwaukee, WI 53209

Sequence (continued)

5. When the UHMW blocks on the carriage makes contact with the jackscrew assemblies the carriage will stop. An increase in hydraulic pressure occurs in the cylinder and the supply line. See Figure 9-5.
6. The increase in pressure is sensed by the pressure switch and appears on the pressure gauge. The switch activates, interrupting the control circuit to the motor starter, shutting down the hydraulic pump unit. See Figure 9-6.
7. When the pump stops, the line check valve closes and captures the fluid behind it in the lines and cylinders. This holds the carriage at the upper level.

NOTE *When the emergency stop is pushed, the line check valve closes and captures the fluid behind it in the lines and cylinders. This holds the carriage at its current position.*

8. When the down button is pressed on the push-button station, the stem on the down solenoid valve is energized. The hydraulic fluid in the supply line and cylinder returns to the reservoir through the oil filter.
9. As the oil leaves the cylinder, the weight of the carriage extends the piston and lowers the carriage. The return fluid passes through the flow control valve and restricts the fluid movement. This action controls the carriage down speed.
10. The timing relay in the control panel is activated and holds the down solenoid open. The timer is pre-set to allow enough time for the carriage to descend to the first level. The down solenoid closes when either the timer "times out" at 120 seconds or the next time the up button is pressed. This completes one full cycle of operation.

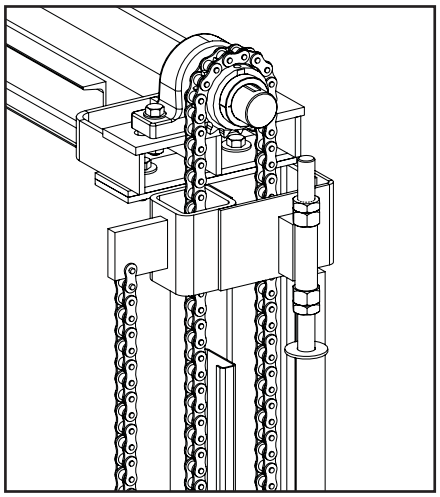

Jackscrew Figure 9-5

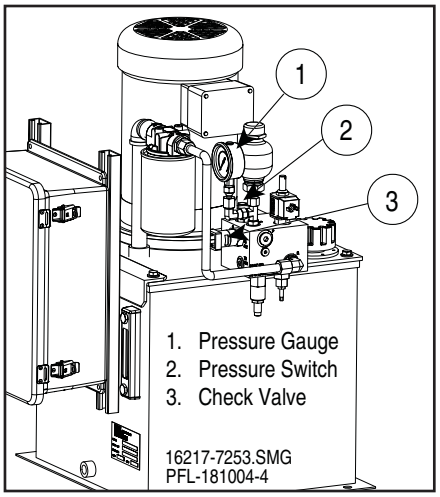

Hydraulic Pump Figure 9-6

MATERIAL HANDLING SOLUTIONS
www.pflow.com
P 414 352 9000
F 414 352 9002
6720 N. Teutonia Ave.
Milwaukee, WI 53209

To Operate the Lift

1. Close all doors and gates and make sure the latches are engaged.
2. Press the desired floor level button on the push-button station to move the carriage to the desired floor. The carriage will stop when the appropriate level is reached.
3. When the VRC arrives at the appropriate level and comes to a complete stop, open the doors and gates.
4. If an emergency occurs when the carriage is moving, push the emergency stop (E-stop) button. The button will keep the lift inoperable until the button is pulled out. See Figure 9-7.

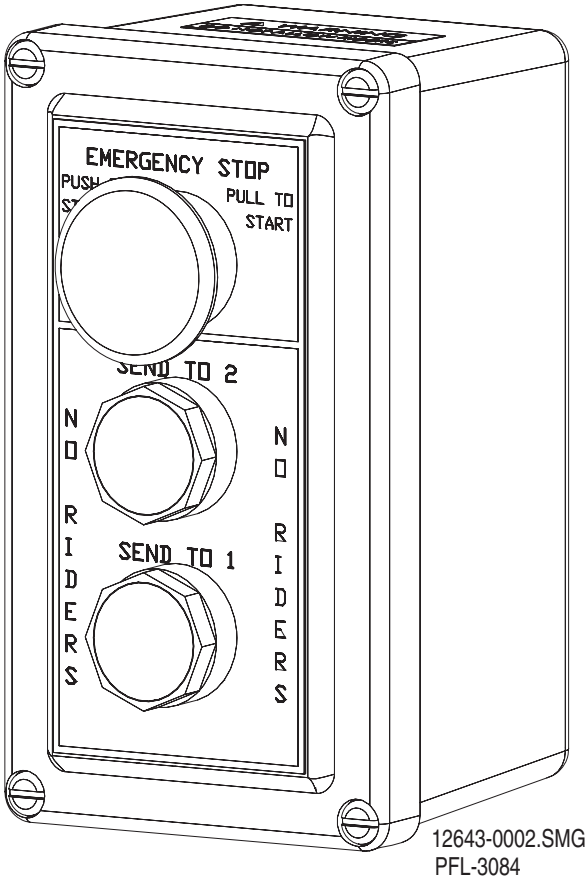

Push-button Station Figure 9-7

MATERIAL HANDLING SOLUTIONS
www.pflow.com
P 414 352 9000
F 414 352 9002
6720 N. Teutonia Ave.
Milwaukee, WI 53209

Before You Begin

Read this entire manual before operating the Vertical Reciprocating Conveyor (VRC).

Service must be performed by qualified and trained service technicians only.

NOTICE

ASME B20.1-2015 defines a qualified person as a person who, by possession of a recognized degree or certificate of professional standing, or by extensive knowledge, training, and experience, has successfully demonstrated his/her ability to solve problems relating to the subject matter and work.

Personnel to carry out work on the VRC must exclusively be qualified personnel who - based upon their education, experience, instructions as well as knowledge concerning relevant standards and provisions, accident prevention, regulations and operating conditions - have been authorized by the person being responsible for safety, to carry out the activities described in these instructions and who - when doing so - are in a position to recognize possible risks early and to avoid them.

⚠ DANGER

Keep clear of unsupported platforms. Stay out of the area under a raised platform. If a maintenance operation requires the carriage to remain in the raised position, physically secure the carriage with a maintenance pin, DeckLock system, chains, cables, or with a maintenance operation option for the platform.

Emergency Use Only!

The down solenoid is equipped with a manual lowering valve. This is to be used only in emergency situations when a load is stuck in upward mid-travel and the only way to free the load is to lower the carriage. See Figure 10-1.

1. ***Pull the manual lowering valve up.*** This will allow the carriage to descend.
2. When the carriage reaches the floor, release and ***push the manual lowering valve down*** to properly seat the valve in the closed position.

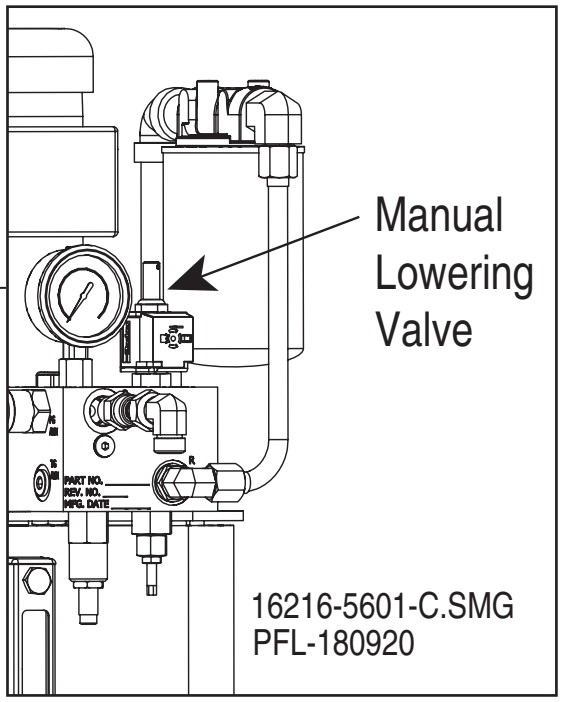

Manual Lowering Valve Location
Figure 10-1

MATERIAL HANDLING SOLUTIONS
www.pflow.com
P 414 352 9000
F 414 352 9002
6720 N. Teutonia Ave.
Milwaukee, WI 53209

MATERIAL HANDLING SOLUTIONS
www.pflow.com
P 414 352 9000
F 414 352 9002
6720 N. Teutonia Ave.
Milwaukee, WI 53209

⚠ WARNING

- Do not use any corrosive or flammable solvents or cleaning agents on the machine that contain TRI, PER, TETRA, or FCHC. Read the instructions on the packaging when use is made of chemical substances (cleaning agents).
- Electrical components should not make contact with water or other liquids.
- Do not clean the VRC or any of its components with compressed air or water under high pressure.
- Do not use abrasive steel pads, wire brushes, or scrapers when cleaning.
- Avoid parts made of rubber or plastic, such as cables and gaskets, from making contact with oil, solvents, or other chemicals.
- Climbing, sitting, walking, or riding on equipment while the equipment is in operation could result in death or serious injury.
- Close all gates before the carriage is moved. Never leave the lift unattended with the gates in the open position. Never close gates when a person is on the carriage or within the fenced area.
- The most common reason for access to the area beneath the carriage is to remove debris from the pit. This is best accomplished using a long handled broom or rake to avoid entering the pit under the raised carriage deck. Only qualified person following proper lockout/tagout procedures with the carriage properly secured in a raised position are permitted to access the pit or hoistway enclosure at the bottom level. Refer to Bulletin 15709-0083 for additional information.
- Entanglement hazard! Secure long hair, wear snug-fitting clothing, and avoid wearing jewelry while using the VRC.

Cleaning

1. Remove all product from the VRC carriage.
2. Lockout the lift in accordance with the facility Lockout/Tagout program.
3. Remove spills and dirt by hand.
4. Refer to Bulletin 15709-0083 for additional information on procedures to access the area beneath the carriage to remove debris from beneath the carriage.
5. Report any unsafe condition or damage to the personnel responsible for the VRC and make sure that any damage is remedied before restarting the VRC. Do not allow the lift to operate when unsafe conditions arise.

MATERIAL HANDLING SOLUTIONS
www.pflow.com
P 414 352 9000
F 414 352 9002
6720 N. Teutonia Ave.
Milwaukee, WI 53209

MATERIAL HANDLING SOLUTIONS
www.pflow.com
P 414 352 9000
F 414 352 9002
6720 N. Teutonia Ave.
Milwaukee, WI 53209

The VRC requires minimal attention on a regular basis to prevent equipment failures or accelerated wear and tear. This section is provided for the assistance of qualified and trained service technicians only and is not intended for use by untrained or unauthorized service personnel. Make sure all steps are completed. A record of regular, properly conducted preventive maintenance provides a running history of any issues the VRC may have. The reports will identify trends, and helps anticipate expected wear and tear repairs. Sign and return to PFlow Industries, Inc. Product Support Department via e-mail to psd@pflow.com

NOTICE ASME B20.1-2015 defines a qualified person as a person who, by possession of a recognized degree or certificate of professional standing, or by extensive knowledge, training, and experience, has successfully demonstrated his/her ability to solve problems relating to the subject matter and work.

⚠ WARNING

- If any defects relating to operating safety and reliability are detected or if any damage occurs, the VRC must be taken out of operation immediately.
- Lockout/tagout the VRC before performing maintenance on electrical components. De-energize any circuit before work is begun.
- Take appropriate measures for safely working at heights.
- Make sure that no persons or objects are within the range of any moving parts of the VRC.
- Climbing, sitting, walking, or riding on equipment while the equipment is in operation could result in death or serious injury.
- If this VRC needs to be modified in any way, contact PFlow Industries, Inc. for assistance. Do not make any unauthorized changes.
- Before the VRC is put into operation, all VRC parts must comply with all relevant health and safety directives and regulations.
- Close all gates before the carriage is moved. Never leave the lift unattended with the gates in the open position. Never close gates when a person is on the carriage or within the fenced area.
- Entanglement hazard! Secure long hair, wear snug-fitting clothing, and avoid wearing jewelry while using the VRC.

⚠ CAUTION

- Paint overspray on the hydraulic cylinder rod will damage the packing seals and void the manufacturer's warranty. Cover exposed rods with removable plastic or soluble grease while painting or touching up the VRC.

PFLOW INDUSTRIES MATERIAL HANDLING SOLUTIONS
www.pflow.com
P 414 352 9000
F 414 352 9002
6720 N. Teutonia Ave.
Milwaukee, WI 53209

Hydraulic Safety Precautions

⚠ WARNING

- Wear personal protective equipment, such as gloves and safety glasses, whenever installing, servicing, or checking a hydraulic system.
- Assume that all hydraulic hoses and components are pressurized. Relieve all hydraulic pressure before disconnecting any hydraulic line.
- Never try to stop or check for a hydraulic leak with any part of your body; use a piece of cardboard to check for hydraulic leaks.
- Small hydraulic hose leaks are extremely dangerous, and can inject hydraulic oil under the skin, even through gloves.
- Infection and gangrene are possible when hydraulic oil penetrates the skin. See a doctor immediately to prevent loss of limb or death.

- Ingesting hydraulic fluid is toxic and hazardous to people and wildlife. Symptoms may be skin irritation, weakness in the hands, intestinal bleeding, pneumonia, or death. Seek first aid immediately. Dispose of spilled fluids appropriately.

- Hydraulic fluid is flammable. Make sure you know where fire extinguishers are kept and how to use them. Do not weld on or near pipes, tubes, or hoses that are filled with fluid.
- Do not overfill the hydraulic oil tank. Any overflow could cause a fire. Immediately repair any hydraulic oil leaks and clean up any spills.
- Shut off all electrical power to the Vertical Reciprocating Conveyor (VRC) while filling the hydraulic oil tank.
- Materials and fluids soaked in hydraulic fluid should be stored in sealed metal containers and disposed of at proper places.

- Hydraulic fluid is slippery. Wipe up spills immediately to reduce the risk of falls or slips.

21 Series Preventive Maintenance and Schedule Checklist

MATERIAL HANDLING SOLUTIONS

www.pflow.com
P 414 352 9000
F 414 352 9002
6720 N. Teutonia Ave.
Milwaukee, WI 53209

√	Action	How Often
	Verify overall operation.	monthly
	Verify that the carriage deck is flush with the floor level and every level. Adjust as necessary.	monthly
	Verify that all areas under and around the VRC are clean.	monthly
	Verify that all electrical components are undamaged. Repair or replace as needed.	monthly
	Verify that all gates and enclosures are undamaged and properly installed.	monthly
	Verify that all gate interlocks are functioning properly.	monthly
	Verify that all push-button stations and e-stops are functioning correctly on each level.	monthly
	Identify any unsafe condition. Document and report the condition immediately to the customer and then PFlow Industries, Inc. Product Support Department. Do not allow the lift to operate when unsafe conditions arise.	monthly
	Inspect hoses and fitting for leaks.	monthly
	Verify that there is sufficient hydraulic fluid for operation. Add as needed.	monthly
	Inspect all welding, bracing, and anchoring for structural integrity.	3 months
	Verify that all nuts and bolts are tight. Adjust as necessary.	3 months
	Visually inspect all chains (e.g., lift, drive, tensioner, gate) for wear, rust, bent, cracked, or binding links. Lubricate with non-detergent, petroleum-based SAE 30 oil when dry.	3 months
	Verify that all moving components are functioning properly.	3 months
	Inspect all additional options and accessories (e.g., DeckLocks, maintenance pins, limit switches) and operation. Adjust as necessary	3 months
	Visually inspect the wheelblock guide rollers for rotation interference and wear.	3 months
	Verify that all electrical connections are tight.	3 months
	Inspect the drivebase chain sprocket for alignment and wear. Adjust as necessary.	6 months
	Inspect the set collars for alignment. Apply blue Loctite #242 to the setscrews and tighten.	6 months
	Apply lithium axle grease to the pillow block bearings on the drivebase.	6 months
	Verify that the carriage is level. Adjust as necessary.	6 months
	Inspect the hydraulic pump and motor operation, pressure switch setting, relief valve, and velocity fuses.	12 months
	Replace the hydraulic oil and oil filter.	12 months
	Remove the wheelblocks. Inspect the wheelblocks and safety cam for deterioration.	12 months
	Replace all hoses and fittings.	5 years

Additional Notes or Follow-up Requirements

Customer signature:	Date work completed:
Name/Phone:	Authorized Technician(s):
Title:	Name:
E-mail:	Name:

MATERIAL HANDLING SOLUTIONS
www.pflow.com
P 414 352 9000
F 414 352 9002
6720 N. Teutonia Ave.
Milwaukee, WI 53209

Oil Environment

Hydraulic oil with a Saybolt viscosity of between 100 and 150 SSU or ISO 32 at operating temperatures should be used.

Extreme temperatures below 32°F (0°C) or above 100°F (38°C) and corrosive atmosphere may affect oil requirements. Consult PFlow Industries, Inc. Product Support Department for assistance.

Oil Offered

PFlow Industries offers four (4) different ISO 32W oils.

- Standard - PFlow part #9000-9700
- Food Grade - PFlow part #9000-9702
- Biodegradable - PFlow part #9000-9701
- ATF for low temperature environments - PFlow part #9000-9699

Tools Needed

- 5 - 10 gallons (19 - 38 liters) of ISO 32 hydraulic oil with a non-foaming additive
- Funnel with a screen
- Clean, lint-free cloth
- Hydraulic oil filter PFlow part #9760-0010

Change the Oil

Contamination must be periodically removed from the hydraulic system. It is advisable to drain the hydraulic oil after the oil is warmed to about 150°F (66°C). When doing this, the oil impurities have not yet settled and can be removed along with the drained oil.

1. Lower the carriage to the floor. Make sure the cylinders are fully extended.
2. Remove power, and follow OSHA electrical lockout/tagout requirements.
3. Place a catch basin below the hydraulic oil drain plug.
4. Remove the drain plug to drain the hydraulic fluid system.
5. Open the reservoir tank and wipe the inside of the reservoir tank with a clean, lint-free cloth.
6. Replace the rubber gasket seal on the reservoir tank lid.
7. Replace the top of the reservoir tank and close tightly.
8. Wipe the drain plug with a clean, lint-free cloth and replace.
9. Replace the oil filter with a new, factory-authorized oil filter replacement.
10. Remove the fill cap.
11. Use a funnel with a screen and pour ISO 32 hydraulic oil with a non-foaming additive into the reservoir tank. The tank capacity may be 5 - 10 gallons (19 - 38 liters).
12. Replace the fill cap and tighten.
13. Remove OSHA electrical lockout/tagout requirements and restore power.

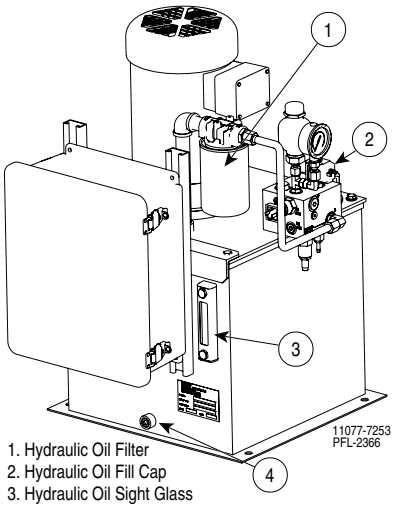

1. Hydraulic Oil Filter
2. Hydraulic Oil Fill Cap
3. Hydraulic Oil Sight Glass
4. Hydraulic Oil Drain Plug

PFLOW INDUSTRIES MATERIAL HANDLING SOLUTIONS
www.pflow.com
P 414 352 9000
F 414 352 9002
6720 N. Teutonia Ave.
Milwaukee, WI 53209

Clean the Reservoir

The reservoir is a settling basin for any contamination. It is important to remove all accumulated sediment from the bottom. Wipe down the interior to remove any further impurities. The inside cover of the reservoir should also be inspected. Large reservoirs can be a source of rust contamination due to condensation. The vibration of the pump unit results in rust flaking off into the fluid.

Flush the Reservoir

If contamination is evident in fluid samples, there is a good chance that accumulation has occurred somewhere within the system "plumbing". These deposits can score the cylinder rods, damage the seals, and interfere with the operation of the VRC. To prevent this type of damage, flush the system with a light viscosity oil containing a rust inhibitor to protect the metal surfaces from rust formation. It is advisable to drain the hydraulic oil after the oil is warmed to about 150°F (66°C). When doing this, the oil impurities have not yet settled and can be removed along with the drained oil.

1. Follow steps 1-10 in ***Change the Oil*** instructions.
2. Use a funnel with a screen and pour ISO 32 hydraulic oil with a non-foaming additive into the reservoir tank. The tank capacity may be 5 - 10 gallons (19 - 38 liters).
3. Add a small percentage of special petroleum solvent cleaner into the reservoir tank.

NOTE

Fluid suppliers are the best source for solvents. Solvents such as alcohol, kerosene, and carbon tetrachloride are low in viscosity and tend to reduce the viscosity of the new fluid. Those solvents may not hold the washed out contaminants in suspension and may deposit them in another part of the system.

4. Replace the fill cap and tighten.
5. Remove OSHA electrical lockout/tagout requirements and restore power.
6. Flush the system by operating the VRC up and down between floor levels. 10 - 50 hours of operation should be sufficient to loosen and remove the contaminated deposits.
7. Follow steps 1-10 in ***Change the Oil*** instructions.
8. Use a funnel with a screen and pour ISO 32 hydraulic oil with a non-foaming additive into the reservoir tank. The tank capacity may be 5 - 10 gallons (19 - 38 liters).
9. Replace the fill cap and tighten.
10. Remove OSHA electrical lockout/tagout requirements and restore power.

MATERIAL HANDLING SOLUTIONS
www.pflow.com
P 414 352 9000
F 414 352 9002
6720 N. Teutonia Ave.
Milwaukee, WI 53209

PFLOW INDUSTRIES MATERIAL HANDLING SOLUTIONS
www.pflow.com
P 414 352 9000
F 414 352 9002
6720 N. Teutonia Ave.
Milwaukee, WI 53209

Before You Begin

Read this entire manual before any troubleshooting and service is attempted on the Vertical Reciprocating Conveyor (VRC).

Observe all the safety information included in section 4 of this manual. Service must be performed only by qualified and trained service technicians familiar with the safe operation of this equipment.

NOTICE

ASME B20.1-2015 defines a qualified person as a person who, by possession of a recognized degree or certificate of professional standing, or by extensive knowledge, training, and experience, has successfully demonstrated his/her ability to solve problems relating to the subject matter and work.

Personnel to carry out work on the VRC must exclusively be qualified personnel who - based upon their education, experience, instructions as well as knowledge concerning relevant standards and provisions, accident prevention, regulations and operating conditions - have been authorized by the person being responsible for safety, to carry out the activities described in these instructions and who - when doing so - are in a position to recognize possible risks early and to avoid them.

⚠ DANGER

- High Voltage! A licensed electrician must install all electrical connections and permanent wiring in accordance with applicable local or national electrical codes. Make sure the equipment is properly grounded in accordance with local electrical codes or, in the absence of local codes, with the current edition of the National Electrical Code NFPA No. 70.
- Keep clear of unsupported platforms. Stay out of the area under a raised platform. If a maintenance operation requires the carriage to remain in the raised position, use a means of support such as adequately sized maintenance chains, maintenance pins, DeckLocks, or straps with shackles around the drivebase that are capable of supporting the weight of the carriage. Refer to Bulletin 15709-0083 for additional information.

⚠ WARNING

- Assess the VRC and identify any potential load jambs.
- Lockout/tagout equipment before performing any adjustments or maintenance. If the equipment is not locked out, it could start unexpectedly and cause injury or damage. ***Make sure all personnel are aware of the potential for stored energy to be present even after the power has been locked out.*** Refer to ANSI Z244.1 and OSHA 29 CFR 1910.147 for minimum requirements for a lockout/tagout system. There may be additional state or local requirements.
- Toppling Hazard! Secure all VRC components (e.g., lift chain, gate panels, enclosure panels) that may fall during the troubleshooting process.
- Secure all VRC access areas (e.g., gates, push-button stations) before any troubleshooting or service is begun. Never leave the VRC unattended with the gates in the open position. Never close gates when a person is on the carriage or within the fenced area.

NOTICE

In the event of a load jam while the carriage is traveling up, push the down button on the push-button station. If that does not lower the carriage, use the manual lowering valve to lower the carriage. See Section 10 in the Owner's Manual.

PFLOW INDUSTRIES MATERIAL HANDLING SOLUTIONS
www.pflow.com
P 414 352 9000
F 414 352 9002
6720 N. Teutonia Ave.
Milwaukee, WI 53209

The following table identifies some of the most common issues with the VRC, the possible causes, and the suggested solution.

Malfunction	Possible Cause	Solution
Push-button controls do not operate the lift.	The emergency stop is pushed in.	Pull the emergency stop out.
	Gates or doors are open or ajar.	Verify that all gates and doors are closed.
	Proofed diagonal drop bar on the carriage is up.	Lower the drop bar into position and make sure the prox sensor is made. The LED will illuminate green.
	Main power disconnect is off.	Verify that there is a reason the power is off before turning the power on.
	Thermal overload has tripped.	Press the reset button. If it trips again, determine the cause. The motor is overheating.
	Control fuse is blown.	Investigate if the problem is related to the main power fuses or the control fuses. Correct the problem and replace the fuse.
	Power circuit between the disconnect and starter is dead.	Using a voltmeter, measure the voltage. Repair as needed.
	Down solenoid is bad.	Inspect, replace solenoid as needed.
	Pressure switch is activated or bad.	Inspect, replace pressure switch as needed.
Motor starts and carriage raises, but motor stops before the second level.	Gates or doors are open or ajar.	Close the gate or door. Inspect the magnets and interlock. Adjust as needed.
	Carriage is overloaded.	Lower and remove excessive weight.
	Object encountered.	Identify the problem. Remove or repair as needed.
	Thermal overload has tripped.	Lower and remove excessive weight. Inspect pump for possible malfunction, excessive ambient temperature, or mechanical binding.
	Pressure switch is activated.	Pressure switch setting is too low. Readjust the pressure switch setting to match the pressure setting listed on the hydraulic power data tag.
Hydraulic pump and motor runs but carriage does not raise, and there is erratic or low pressure shown on the pressure gauge.	Low oil level.	Add oil to proper level.
	Hydraulic pump is bad.	Replace as needed.

MATERIAL HANDLING SOLUTIONS
www.pflow.com
P 414 352 9000
F 414 352 9002
6720 N. Teutonia Ave.
Milwaukee, WI 53209

Malfunction	Possible Cause	Solution
Hydraulic pump and motor runs but carriage does not raise, and there is no pressure shown on the pressure gauge.	Oil is low.	Add oil to proper level.
	Oil pickup tube is disconnected.	Connect oil pickup tube.
	Contamination — pickup tube is blocked.	Open reservoir. Inspect pickup tube. Clean if required.
	*Pump is cavitating.	Oil supply is low — fill reservoir. Oil is too heavy — change to proper viscosity oil.
	Motor rotation is incorrect.	Contact your electrician.
Hydraulic pump and motor keeps running and carriage is at the upper level.	Relief valve set too low.	Readjust the relief valve. Consult PFlow Industries, Inc. Product Support Department for assistance.
	Pressure switch set too high.	Readjust the pressure switch setting to match the pressure setting listed on the hydraulic power data tag.
	Bad pressure switch.	Replace pressure switch.
Excessive pump noise.	Damaged or worn pump.	Consult PFlow Industries, Inc. Product Support Department for assistance.
	*Pump is cavitating.	Oil supply is low — fill reservoir. Oil is too heavy — change to proper viscosity oil.
	**Aeration is occurring.	Oil supply is low — fill reservoir.
Carriage raises, but will not lower.	Mechanical interference.	Identify the problem. Remove obstruction and repair as needed.
	Safety cam has set.	Identify the problem and repair as needed.
	Down solenoid is not actuating.	Troubleshoot the down solenoid and replace as needed.
	Velocity fuse is set.	Inspect hydraulic hose for breaks or a fitting leak. If none is found, attempt to increase pressure in the cylinders by pressing the up button on the push-button station.

** Cavitation is a vacuum in the fluid caused by a restricted or sharp bend in the inlet line, a clogged filter, or by fluid that is too high in viscosity. The characteristic sound of cavitation is a high-pitched "scream". The noise increases with the degree of cavitation and with increased operating pressure.*

*** Aeration is the presence of excessive air, usually in the form of bubbles, disbursed through the fluid caused by a damaged inlet or return line; a loose or defective fitting or seal; damaged or worn cylinder rod, packing, or seals; cracked junction blocks, tees, or piping; fluid level too low; air trapped in filter or excessive air trapped after adding fluid. Overheating or jerky and uneven movement in the pump or cylinders are the obvious symptoms of aeration.*

MATERIAL HANDLING SOLUTIONS
www.pflow.com
P 414 352 9000
F 414 352 9002
6720 N. Teutonia Ave.
Milwaukee, WI 53209

Malfunction	Possible Cause	Solution
Carriage drifts down from a raised position.	Down solenoid manual release valve is open or not seated properly.	Close or seat the manual lowering valve properly.
	Down solenoid or check valve malfunction.	Inspect and replace as needed.
	Oil is bypassing the piston or rod end seals.	Replace the cylinder.
Carriage is spongy or bouncy.	Air is inside the cylinders.	Operate the VRC up and down between floor levels numerous times to remove air from the cylinder.
		Consult PFlow Industries, Inc. Product Support Department for assistance.
	Extra bouncy when moving in the down direction — bad accumulator	Replace the accumulator.
Carriage lowers but stops early.	Debris in the pit.	Remove debris from pit and clean the area.
	Flow control valve is not set properly and timer has timed out (120 seconds).	Adjust flow control valve.
Carriage is binding.	Lift chains are out of sequence.	Inspect the number of chain links between the header sprocket and the carriage. Repair as needed.
Rough or noisy operation.	Travel interference.	Identify the problem, remove, and repair as needed.
	Interference between the chain and the chain tube block or header weldment.	Determine the cause and correct.
	Shaft pillow block bearings are worn or dry.	Inspect, lubricate, and replace as needed.
	Cylinder sprocket bearing is worn or corroded.	Inspect, lubricate, and replace as needed.
	Wheelblock guide rollers are worn.	Inspect and replace as needed. Determine the cause and correct.
Excessive metal shavings are accumulating at the bottom of the columns.	Lift chain is rubbing on the header weldment or chain tube block.	Immediately remove the VRC from operation. Contact PFlow Industries, Inc. Product Support Department for assistance.

PFLOW INDUSTRIES MATERIAL HANDLING SOLUTIONS
www.pflow.com
P 414 352 9000
F 414 352 9002
6720 N. Teutonia Ave.
Milwaukee, WI 53209

Before You Begin

Read this entire manual.

The Purpose of the Motor Overload Sensor (MOL)

The PFlow Industries, Inc. D series Vertical Reciprocating Conveyor (VRC) is equipped with a Motor Overload Sensor (MOL). The MOL is prewired and located inside the electrical control panel. See Figure 14-1.

The MOL monitors the motor amp draw and provides enhanced over current protection of the lift motor. The MOL must be adjusted to the maximum "expected" current draw. If the motor current rises above the MOL set point, the MOL will trip. Tripping can be caused by a circuit malfunction, overloading the capacity of the lift, or an overhanging load trapped between floors.

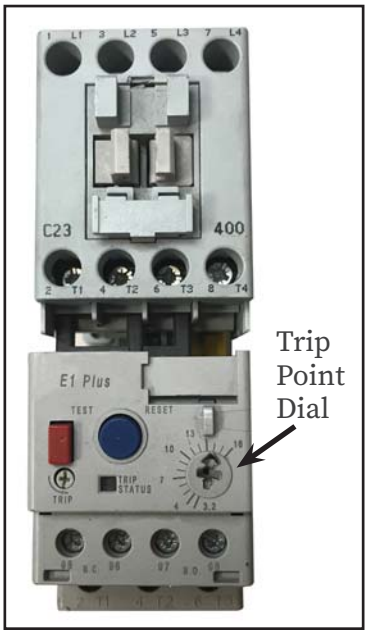

Motor Overload Sensor Figure 14-1

Locate the Full Load Amperage (F.L.A.) Value

1. Review the electrical drawing J#-0050.
2. Locate the hydraulic pump motor information on page 1 or page 2. The F.L.A. value is listed after the HP value. See Figure 14-2. The information may also be found on the VRC Specification for this job.

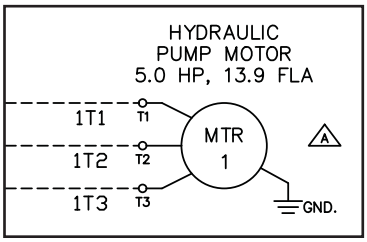

Pump Motor Information Figure 14-2

Test and Calibrate the MOL

1. Turn the trip point dial to match the F.L.A. value.
2. Place the maximum product load on the carriage.

Run the carriage up.

Did the MOL trip?

YES → Turn the trip point dial clockwise one hash mark. Start at ground level and run the carriage up.

Did the MOL trip?

YES → Contact PFlow Industries, Inc. for assistance.

NO → Run the carriage down.

Did the MOL trip?

YES → Turn the trip point dial clockwise one hash mark. Start at ground level, run the carriage up, and then run the carriage down.

Did the MOL trip?

YES → Contact PFlow Industries, Inc. for assistance.

NO → The MOL is properly adjusted.

MATERIAL HANDLING SOLUTIONS
www.pflow.com
P 414 352 9000
F 414 352 9002
6720 N. Teutonia Ave.
Milwaukee, WI 53209

MATERIAL HANDLING SOLUTIONS
www.pflow.com
P 414 352 9000
F 414 352 9002
6720 N. Teutonia Ave.
Milwaukee, WI 53209

This recommended spare parts list is generic (not specific to your unit). Part numbers are deleted due to variables specific to each application. This list is a guide to assist the customer in establishing an emergency inventory for your PFlow Industries, Inc. VRC. Convenience and minimal down time are two good reasons to maintain an inventory of spare parts. This list does not imply that any part is subject to failure. However, should any of these parts fail, they could put the VRC out of service.

Description	Quantity	Part Number
Wheelblocks		
Wheel	4	
Guide Roller	4	
Shoulder Bolt	4	
Roll Pin	4	
Gates/ Limit Switches		
Interlock	1	
Push-button Stations		
Kit Emergency Stop (E-Stop)	1	
Operator Push-button Black Flush	1	
General		
Lubricant Film Spray	1	
Paint 13 oz. PFlow Blue Spray	1	
Electrical		
FuseMain	2	
Fuse Secondary	5	
Hydraulics		
Hose, High Pressure	2	
Hose, Low Pressure	1	
Filter	1	

Part numbers in this manual are subject to change without notice. A $50 rush fee may be charged for requested same-day shipments. Components replaced under warranty will be charged for in accordance with our RGA procedures. Minimum order charge is $35, FOB Milwaukee, Wisconsin. PFlow Industries, Inc. Product Support Department must issue an authorization in advance of any claim for warranty and/ or warranty labor. Any changes, updates, parts by others or modifications after shipment are unknown to PFlow Industries, Inc.

MATERIAL HANDLING SOLUTIONS
www.pflow.com
P 414 352 9000
F 414 352 9002
6720 N. Teutonia Ave.
Milwaukee, WI 53209

MATERIAL HANDLING SOLUTIONS
www.pflow.com
P 414 352 9000
F 414 352 9002
6720 N. Teutonia Ave.
Milwaukee, WI 53209

Before You Begin

Part numbers in this manual are subject to change without notice. A $50 rush fee may be charged for requested same-day shipments. Components replaced under warranty will be charged for in accordance with our RGA procedures. Minimum order charge is $35, FOB Milwaukee, Wisconsin.

Hydraulic Components

Item	Qty	Part No.	Description
1**		16090-**	Hydraulic Cylinder, 2.5 Bore
	1	8766-1009	Kit, Fitting, includes Items 2, 3, 6, 8, 9, and 10
2	2	8893-0010	Fitting, Elbow, Straight Thread, 7/8-14 M, 7/8-14 F
3	2	8892-0009	Velocity Fuse
4	2	8625-0024	Hose, High Pressure, 24'
5	1	4544-0000	Clevis Pin and Clip
6	2	8628-0000	Fitting, Elbow, FOR 3/8"M-ORFS 11/16-16 x 1/2"M-NPT 1/2-14
7	2	8626-0020	Hose, Low Pressure, 20'
8	1	9266-0008	Fitting, Adapter, FOR 1/2 Male OFS x 3/4-16 Straight Thread O-ring
9	1	9679-0008	Fitting, T Branch, 1/2" Male Inline x 1/2" Female O-ring Face Seal
10	1	8629-0000	Fitting, T Run, 3/8 Inline Male O-ring Face Seal x 3/8" Male Pipe
11	1	7260-0006	Fitting, Reducer, 1/2 M x 1/2 MPT x 3/8 FPT

*** Contact PFlow Industries, Inc. Parts Department for part number. VRC serial number required.*

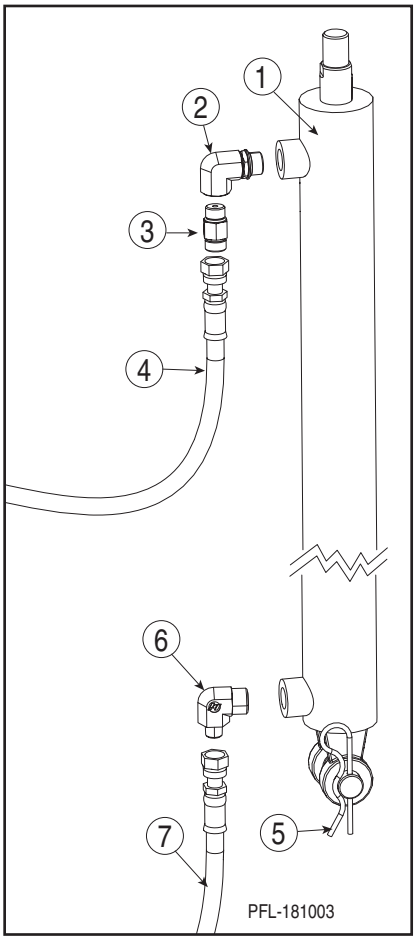

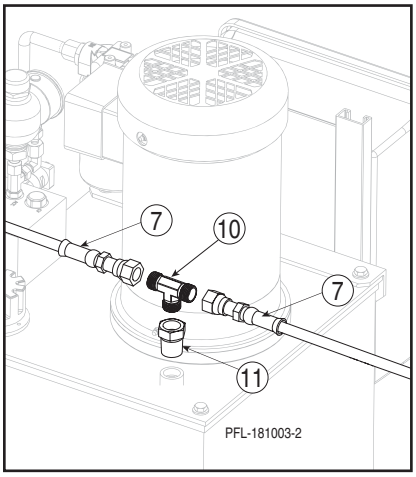

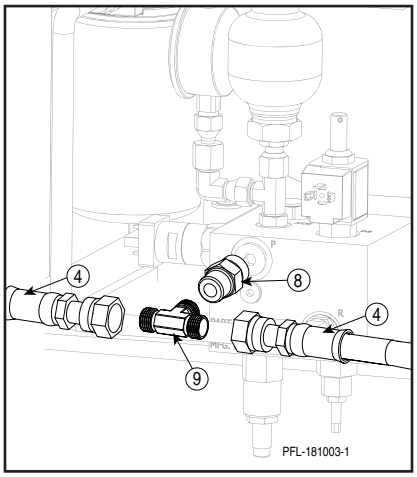

MATERIAL HANDLING SOLUTIONS
www.pflow.com
P 414 352 9000
F 414 352 9002
6720 N. Teutonia Ave.
Milwaukee, WI 53209

Carriage Stop

Item	Qty	Part No.	Description
	1	10414-3000	Kit, Pad, UHMW, Carriage (includes items 1 - 3)
1	2	8399-0016	Screw, BHSC, 3/8-16 x 1" Long
2	1	10414-0000	Pad, UHMW, Hydraulic Carriage Mounting
3	2	6708-0011	Nut, Lock, Nylon, 3/8-16

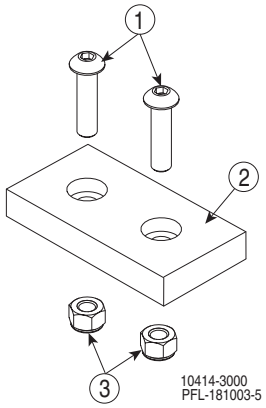

Jackscrew Assembly

Item	Qty	Part No.	Description
1	2	8399-0016	Nut, Hex, Jam, 1-8 UNC
2	2	6358-0018	Nut, Hex, 1-8 UNC
3	1	8326-0018	Jackscrew, Adjustable Carriage Stop

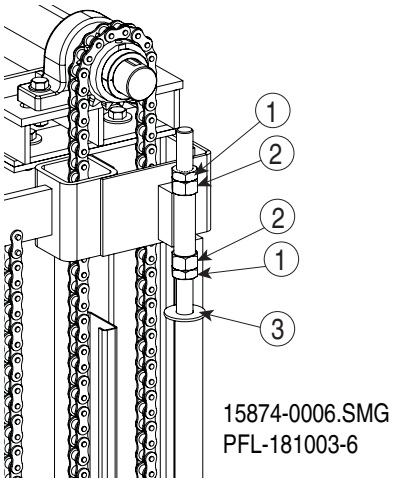

Manifold Block Assembly

Item	Qty	Part No.	Description
1	1	11078-0003	Valve, Check
2	1	11078-0015	Gauge, Pressure
3	1	11078-0014	Accumulator
4	1	11078-0002	Valve, Down with Manual Release
5	1	11078-0005	Coil, Down Valve - 24 V
6	1	11078-0016	Manifold Block Assembly
7	1	11078-0026	Elbow, 1/4" NPT Street
8	1	11078-0001	Valve, Flow Control
9	1	11078-0004	Valve, Relief
10	1	11078-0006	Switch, Pressure

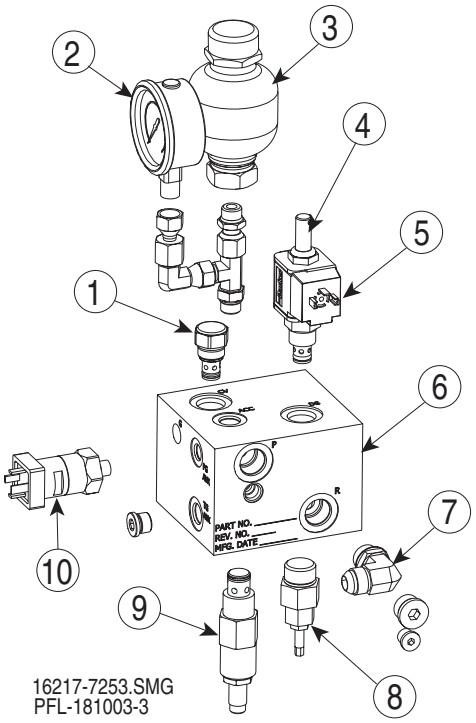

MATERIAL HANDLING SOLUTIONS
www.pflow.com
P 414 352 9000
F 414 352 9002
6720 N. Teutonia Ave.
Milwaukee, WI 53209

Hydraulic Pump and Motor

Item	Qty	Part No.	Description
1	1	11078-0011	Filter, Hydraulic Oil
2	1	**	Motor Assembly, Pump
3	1	11078-0007	Breather, Oil Fill
4	1	11078-0013	Oil Sight Gauge
5	1	**	Hydraulic Pump Assembly
6	1	11078-0012	Strainer, Hydraulic Oil
*	1	11078-0020	Coupling, Motor Half
*	1	11078-0021	Coupling, Pump Half
*	1	11078-0022	Coupling, Insert

** Not Shown on Illustration*

*** Contact PFlow Industries, Inc. Parts Department for part number. VRC serial number required.*

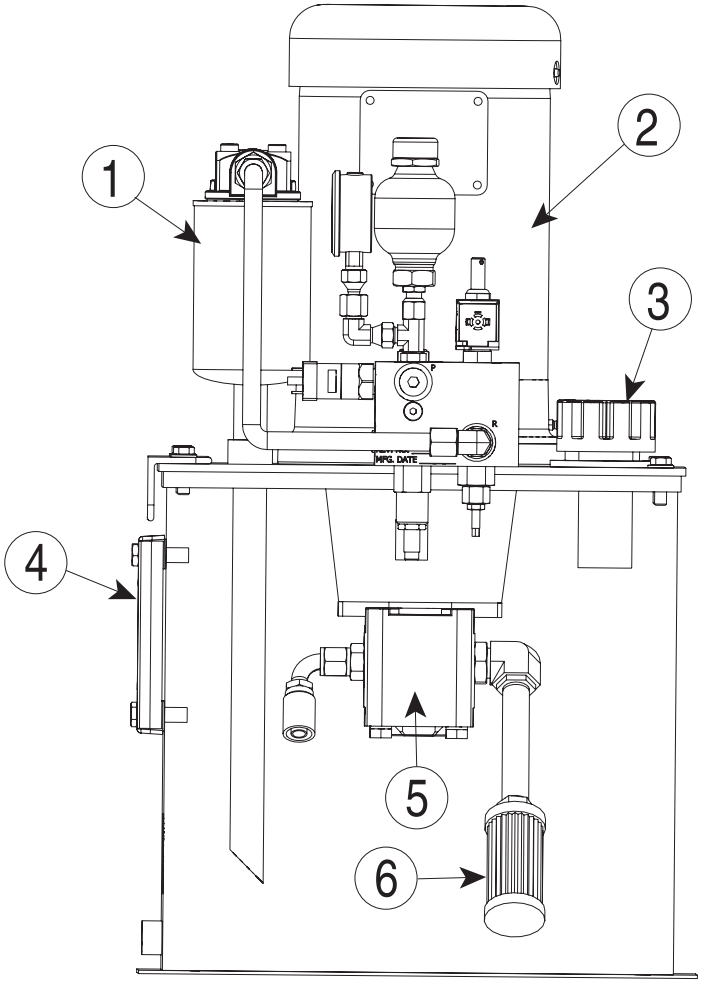

16217-7253.SMG
PFL-181003-4

MATERIAL HANDLING SOLUTIONS
www.pflow.com
P 414 352 9000
F 414 352 9002
6720 N. Teutonia Ave.
Milwaukee, WI 53209

Chain Loop Arrangement

The following drawings illustrate the path of the lift chain and tensioner chain. The size of the drive and the chains vary by application. Consult PFlow Industries, Inc. Parts Department before ordering.

Item	Qty	Part No.	Description
1	1	2692-1000	Chain, #80, SBR
	1	2693-1000	Chain, #100, SBR
2	2	2692-1001	Master Link, #80 Chain, SBR
	2	2693-1001	Master Link, #100 Chain, SBR
3	1	6190-0000	Toggle, #80 Chain
	1	6189-0000	Toggle, #100 Chain

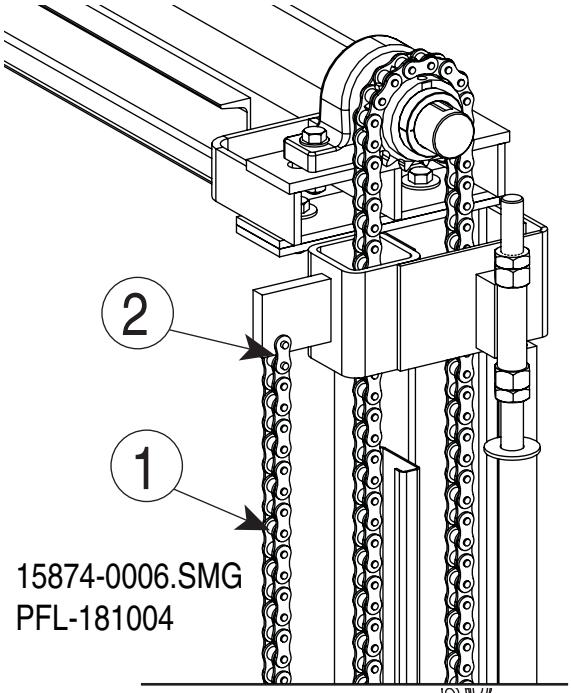

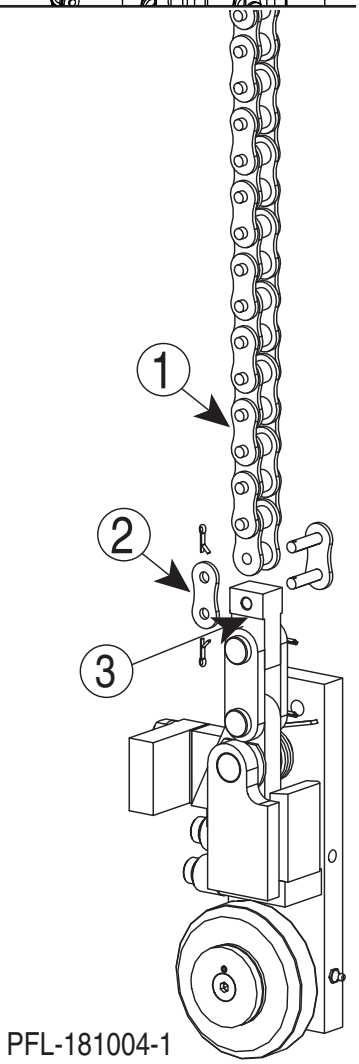

MATERIAL HANDLING SOLUTIONS
www.pflow.com
P 414 352 9000
F 414 352 9002
6720 N. Teutonia Ave.
Milwaukee, WI 53209

Interlocks

The interlock is a device used to mechanically prevent the gate from opening. Below is the Anderson interlocks supplied. As a safety device, replacement components are only available as shown below. Some configurations may vary by application.

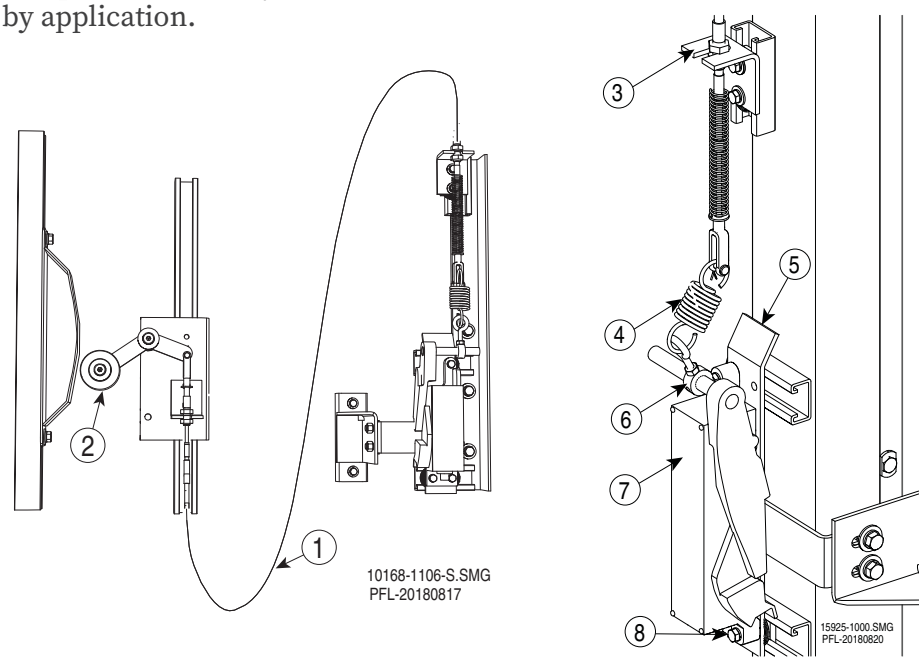

Item	Qty	Part No.	Description
1	1	9292-0120	10' Control Cable Assembly
	1	9292-0180	15' Control Cable Assembly
	1	9292-0300	25' Control Cable Assembly
	1	9292-0360	30' Control Cable Assembly
2	1	9280-0000	Roller Arm Assembly
	1	2618-0000	Wheel only
3	1	10170-0000	Bracket, Mtg, Control Cable
4	1	**	Extension Spring
5	1	10167-0000	Plate, Interlock, Gate V.A.
6	1	9332-0009	Set Collar, Cable Interlock
	1	3694-0000	Eye Bolt, 1/4-20, 1" Long
	1	6358-0009	Hex Nut, 1/4-20, Plated
7	1	2678-0000	Interlock, Anderson, LH
	1	2678-0001	Interlock, Anderson, RH
	1	2678-4000	Interlock, Anderson, LH, Water Resistant
	1	2678-4001	Interlock, Anderson, RH, Water Resistant
	1	2678-0000-QD	Interlock, Anderson, LH, with Quick Disconnect
	1	2678-0001-QD	Interlock, Anderson, RH, with Quick Disconnect
	1	2678-4000-QD	Interlock, Anderson, LH, Water Resistant, with QD
	1	2678-4001-QD	Interlock, Anderson, RH, Water Resistant, with QD
8	1	6029-0020	Screw, HHC, 1/4-20, 1-1/4"
	1	5858-0009	Lock Washer, Std, 1/4
	1	5834-0001	Nut, 1/4-20, with Spring

*** Contact PFlow Industries, Inc. Parts Department for part number. VRC serial number required.*

MATERIAL HANDLING SOLUTIONS
www.pflow.com
P 414 352 9000
F 414 352 9002
6720 N. Teutonia Ave.
Milwaukee, WI 53209

Interlocks

The interlock is a device used to mechanically prevent the gate from opening. Below is the GAL interlock supplied. As a safety device, replacement components are only available as shown below. Some configurations may vary by application.

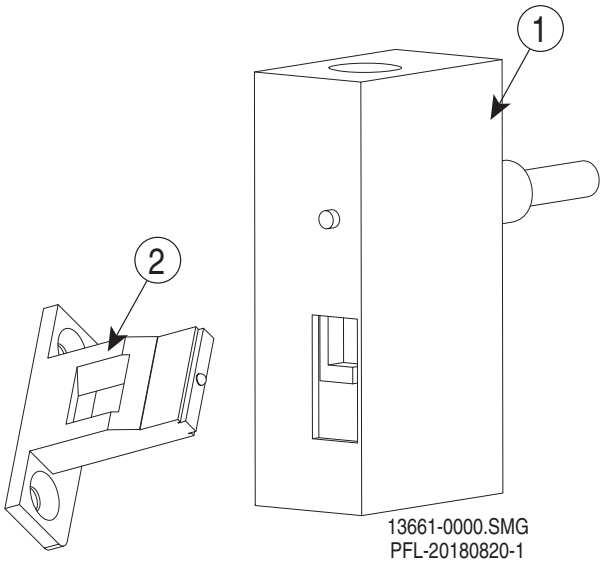

Item	Qty	Part No.	Description
1	1	13660-0000	Interlock, GAL, RH
	1	13661-0000	Interlock, GAL, LH
2	1	8078-0013	Keeper

MATERIAL HANDLING SOLUTIONS
www.pflow.com
P 414 352 9000
F 414 352 9002
6720 N. Teutonia Ave.
Milwaukee, WI 53209

Gate Status Switches

A gate status switch is supplied when the contact are not being used. If required, it will be mounted to the gate post or header. Normally the GAL and Anderson interlocks do not use this switch. Specific order requirements may differ.

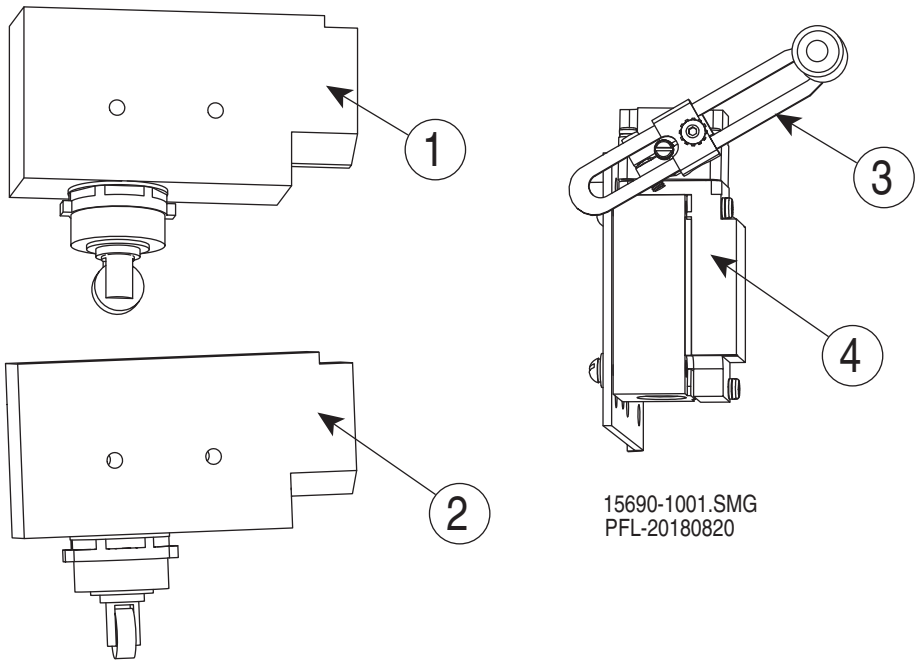

Item	Qty	Part No.	Description
1	1	6220-0000	Roller Plunger, Parallel
2	1	6216-0000	Roller Plunger, Perpendicular
3	1	2893-0000	Adjustable Roller Arm
4	1	2891-0000	Switch

PFLOW INDUSTRIES MATERIAL HANDLING SOLUTIONS
www.pflow.com
P 414 352 9000
F 414 352 9002
6720 N. Teutonia Ave.
Milwaukee, WI 53209

Upper Wheelblock Assembly Phenolic Wheel

5-1/2" Wheel	Right-hand	16719-0000
5-1/2" Wheel	Left-hand	16720-0000
5-3/8" Wheel	Right-hand	6197-1000
5-3/8" Wheel	Left-hand	6196-1000
5-1/4" Wheel	Right-hand	6197-0000
5-1/4" Wheel	Left-hand	6196-0000

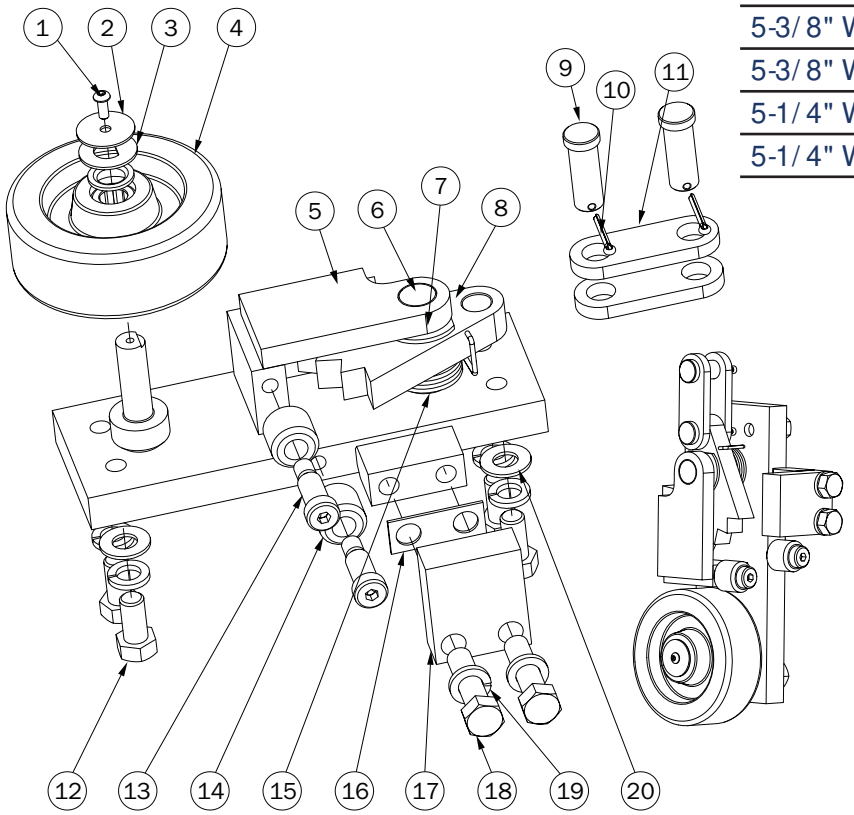

Item	Qty	Part No.	Description
1	1	2888-0010	BHSCS, 1/4-20 X 5/8
2	1	5222-0000	Washer, Flat
3	1	8774-0000	Washer, D, 3/4 ID X 1 1/2
4	1	16716-0000	Wheel, Phenolic, 5 1/2
	1	2591-1000	Wheel, Phenolic, 5 3/8
	1	2591-0001	Wheel, Phenolic, 5 1/4
5	1	5224-0000	Whlblk Wldm, Upper RH
	1	5223-0000	Whlblk Wldm, Upper LH
6	1	5230-0000	Pin, Cam, Wheelblock
7	1	8339-0000	Bearing, Thrust
8	1	6186-0000	Safety Cam Assy
9	2	2521-0000	Pin, Clevis, 3/4 X 2

Item	Qty	Part No.	Description
10	2	2522-0000	Pin, Cotter, 5/32 X 1 1/4
11	2	6187-0000	Link, Safety Cam
12	4	7278-0024	Screw, HHC, 5/8-11 X 1.5, Gr5
13	2	5874-0020	Bolt, Shoulder, 5/8 X 1 1/4
14	2	5221-0000	Roller 1.25 OD Guide Plstc
15	1	2443-0000	Spring, Cam, Torsion
16	1	2767-0000	Spacer, Whlblk Shoe, .08
17	1	2754-0000	Shoe, Wheelblock
18	2	2198-0040	Screw, HHC, 5/8-11 X 2.25, Gr8
19	6	5858-0015	Lock Washer, Std, 5/8
20	4	6296-0015	Washer, Std, Flat, 5/8

MATERIAL HANDLING SOLUTIONS
www.pflow.com
P 414 352 9000
F 414 352 9002
6720 N. Teutonia Ave.
Milwaukee, WI 53209

Lower Wheelblock Assembly Phenolic Wheel

5-1/2" Wheel	Right-hand	16718-0000
5-1/2" Wheel	Left-hand	16717-0000
5-3/8" Wheel	Right-hand	2721-1000
5-3/8" Wheel	Left-hand	2089-1000
5-1/4" Wheel	Right-hand	2721-0000
5-1/4" Wheel	Left-hand	2089-0000

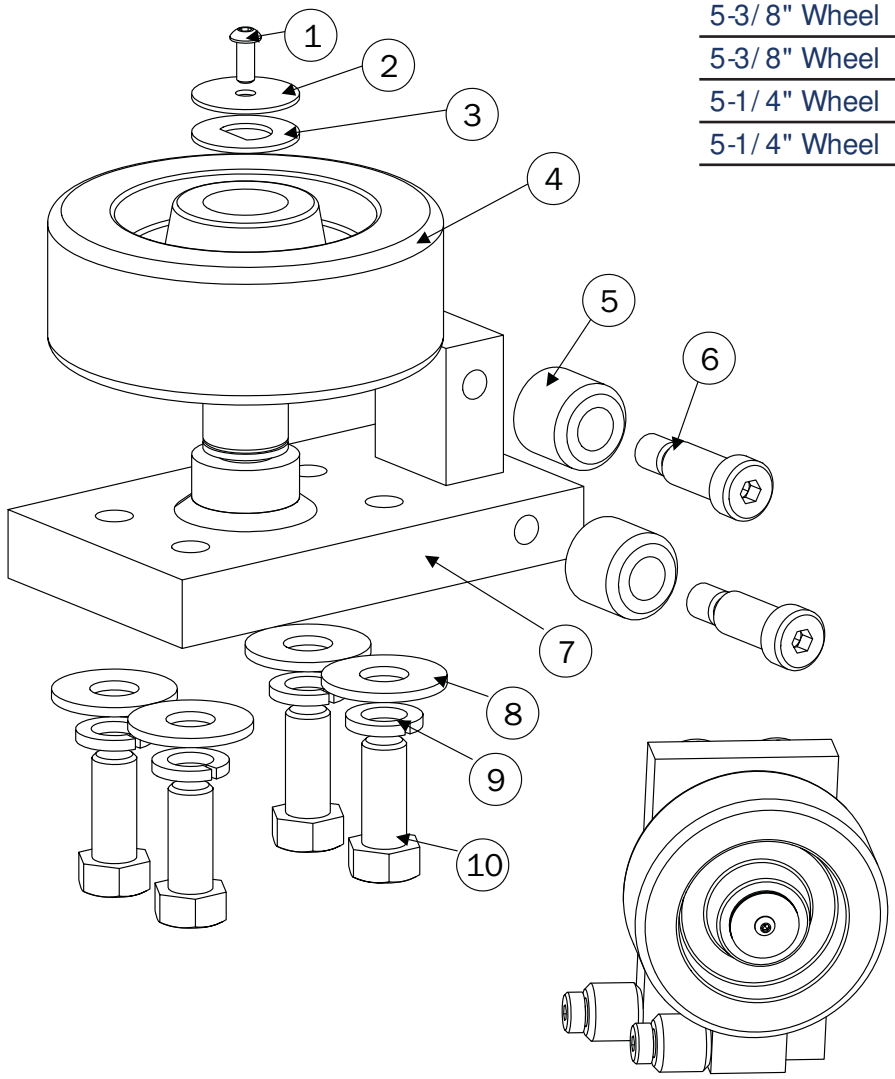

Item	Qty	Part No.	Description
1	1	2888-0010	BHSCS, 1/4-20 X 5/8
2	1	5222-0000	Washer, Flat
3	1	8774-0000	Washer, D, 3/4 ID X 1 1/2
4	1	16716-0000	Wheel, Phenolic, 5 1/2
	1	2591-1000	Wheel, Phenolic, 5 3/8
	1	2591-0001	Wheel, Phenolic, 5 1/4
5	2	5221-0000	Roller 1.25 OD Guide Plstc

Item	Qty	Part No.	Description
6	2	5874-0020	Bolt, Shoulder, 5/8 X 1 1/4
7	1	2079-0000	Whlblk Wldm, Lower RH
	1	5223-0000	Whlblk Wldm, Upper LH
8	4	6296-0015	Washer, Std, Flat, 5/8
9	6	5858-0015	Lock Washer, Std, 5/8
10	4	7278-0024	Screw, HHC, 5/8-11 X 1.5, Gr5

PFLOW INDUSTRIES MATERIAL HANDLING SOLUTIONS
www.pflow.com
P 414 352 9000
F 414 352 9002
6720 N. Teutonia Ave.
Milwaukee, WI 53209

Upper Wheelblock Assembly Phenolic Wheel with Heat Treated Link

5-1/2" Wheel	Right-hand	16719-0010
5-1/2" Wheel	Left-hand	16720-0010
5-3/8" Wheel	Right-hand	6197-1010
5-3/8" Wheel	Left-hand	6196-1010
5-1/4" Wheel	Right-hand	6197-0010
5-1/4" Wheel	Left-hand	6196-0010

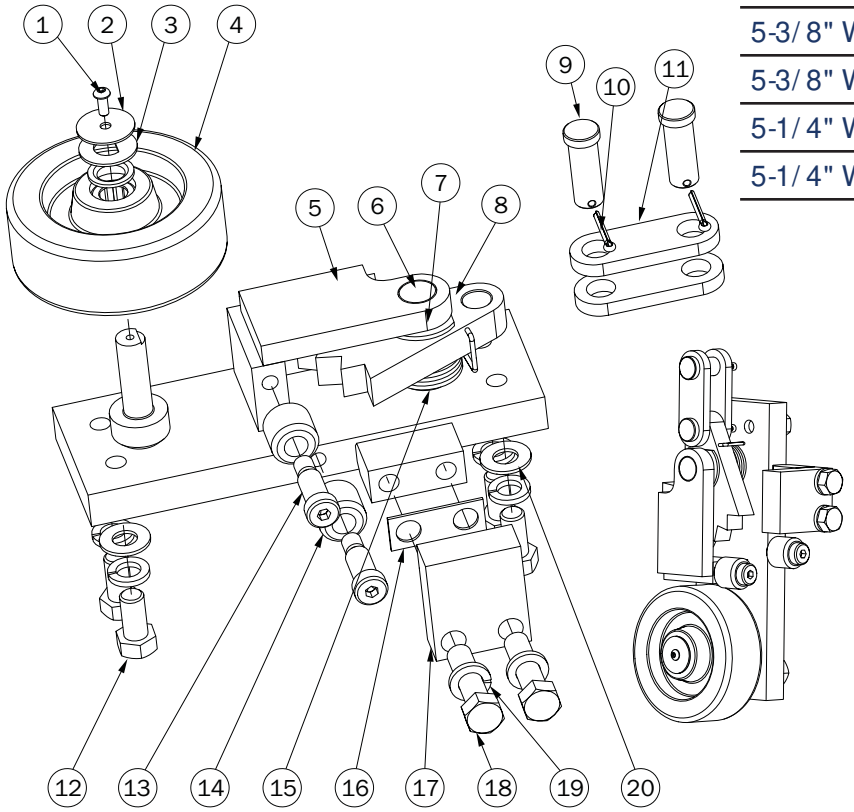

Item	Qty	Part No.	Description
1	1	2888-0010	BHSCS, 1/4-20 X 5/8
2	1	5222-0000	Washer, Flat
3	1	8774-0000	Washer, D, 3/4 ID X 1 1/2
4	1	16716-0000	Wheel, Phenolic, 5 1/2
	1	2591-1000	Wheel, Phenolic, 5 3/8
	1	2591-0001	Wheel, Phenolic, 5 1/4
5	1	5224-0000	Whlblk Wldm, Upper RH
	1	5223-0000	Whlblk Wldm, Upper LH
6	1	5230-0000	Pin, Cam, Wheelblock
7	1	8339-0000	Bearing, Thrust
8	1	6186-0000	Safety Cam Assy
9	2	2521-0000	Pin, Clevis, 3/4 X 2

Item	Qty	Part No.	Description
10	2	2522-0000	Pin, Cotter, 5/32 X 1 1/4
11	2	6187-0001	Link, Safety Cam
12	4	7278-0024	Screw, HHC, 5/8-11 X 1.5, Gr5
13	2	5874-0020	Bolt, Shoulder, 5/8 X 1 1/4
14	2	5221-0000	Roller 1.25 OD Guide Plstc
15	1	2443-0000	Spring, Cam, Torsion
16	1	2767-0000	Spacer, Whlblk Shoe, .08
17	1	2754-0000	Shoe, Wheelblock
18	2	2198-0040	Screw, HHC, 5/8-11 X 2.25, Gr8
19	6	5858-0015	Lock Washer, Std, 5/8
20	4	6296-0015	Washer, Std, Flat, 5/8

PFLOW INDUSTRIES MATERIAL HANDLING SOLUTIONS
www.pflow.com
P 414 352 9000
F 414 352 9002
6720 N. Teutonia Ave.
Milwaukee, WI 53209

Upper Wheelblock Assembly Steel Wheel

5-1/2" Wheel	Right-hand	16503-0000
5-1/2" Wheel	Left-hand	16504-0000
5-3/8" Wheel	Right-hand	6199-0000
5-3/8" Wheel	Left-hand	6198-0000
5-1/4" Wheel	Right-hand	6491-0001
5-1/4" Wheel	Left-hand	6492-0001

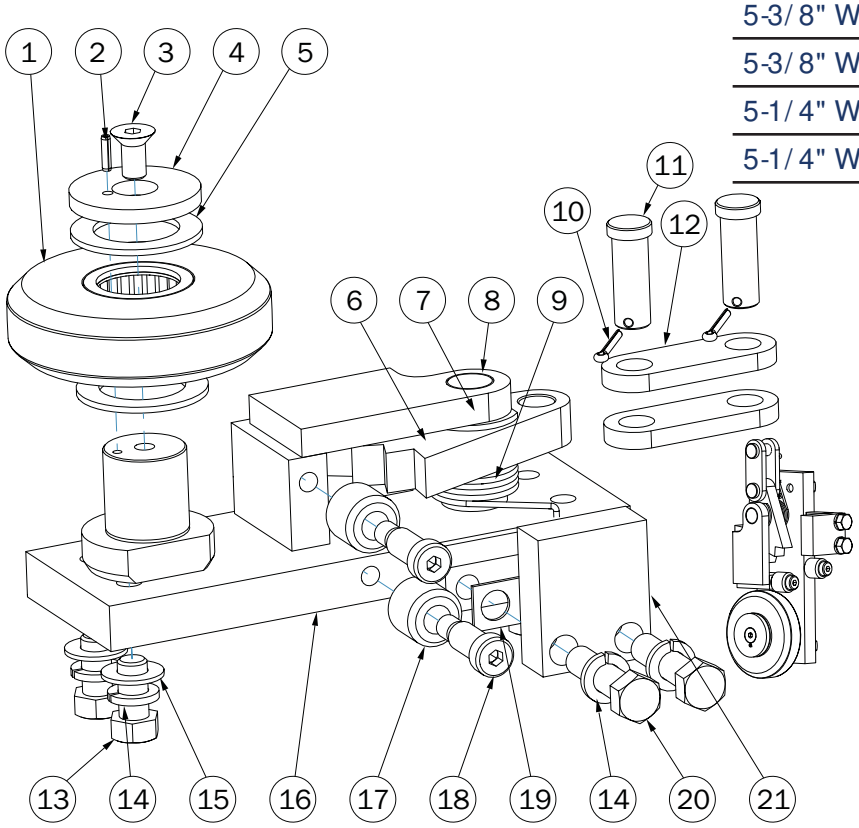

Item	Qty	Part No.	Description
1	1	16505-0000	Wheel, Steel, 5 1/2
	1	6304-0001	Wheel, Steel, 5 3/8
	1	6381-0001	Wheel, Steel, 5 1/4
2	1	5209-0012	Pin, Roll, 3/16 X 3/4" Lg
3	1	4299-0016	Screw, FHSC, 1/2-13 X 1
4	1	3629-0000	Washer, Retainer Steel
5	1	3622-0000	Washer, Thrust, 2 3/4 OD
6	1	6186-0000	Safety Cam Assy
7	1	8339-0000	Bearing, Thrust
8	1	5230-0000	Pin, Cam, Wheelblock
9	1	2443-0000	Spring, Cam, Torsion
10	2	2522-0000	Pin, Cotter, 5/32 X 1 1/4

Item	Qty	Part No.	Description
11	2	2521-0000	Pin, Clevis, 3/4 X 2
12	2	6187-0000	Link, Safety Cam
13	4	7278-0024	Screw, HHC, 5/8-11 X 1.5, Gr5
14	6	5858-0015	Lock Washer, Std, 5/8
15	4	6296-0015	Washer, Std, Flat, 5/8
16	1	5244-0000	Whlblk Wldm, Upper RH
	1	5245-0000	Whlblk Wldm, Upper LH
17	2	5221-0000	Roller 1.25 OD Guide Plastic
18	2	5874-0020	Bolt, Shoulder, 5/8 X 1 1/4
19	1	2767-0000	Spacer, Wheelblock Shoe
21	1	2754-0000	Shoe, Wheelblock
20	2	2198-0040	Screw, HHC, 5/8-11 X 2.25, Gr8

PFLOW INDUSTRIES MATERIAL HANDLING SOLUTIONS
www.pflow.com
P 414 352 9000
F 414 352 9002
6720 N. Teutonia Ave.
Milwaukee, WI 53209

Lower Wheelblock Assembly Steel Wheel

5-1/2" Wheel	Right-hand	16501-0000
5-1/2" Wheel	Left-hand	16502-0000
5-3/8" Wheel	Right-hand	2403-0000
5-3/8" Wheel	Left-hand	2474-0000
5-1/4" Wheel	Right-hand	6493-0000
5-1/4" Wheel	Left-hand	6494-0000

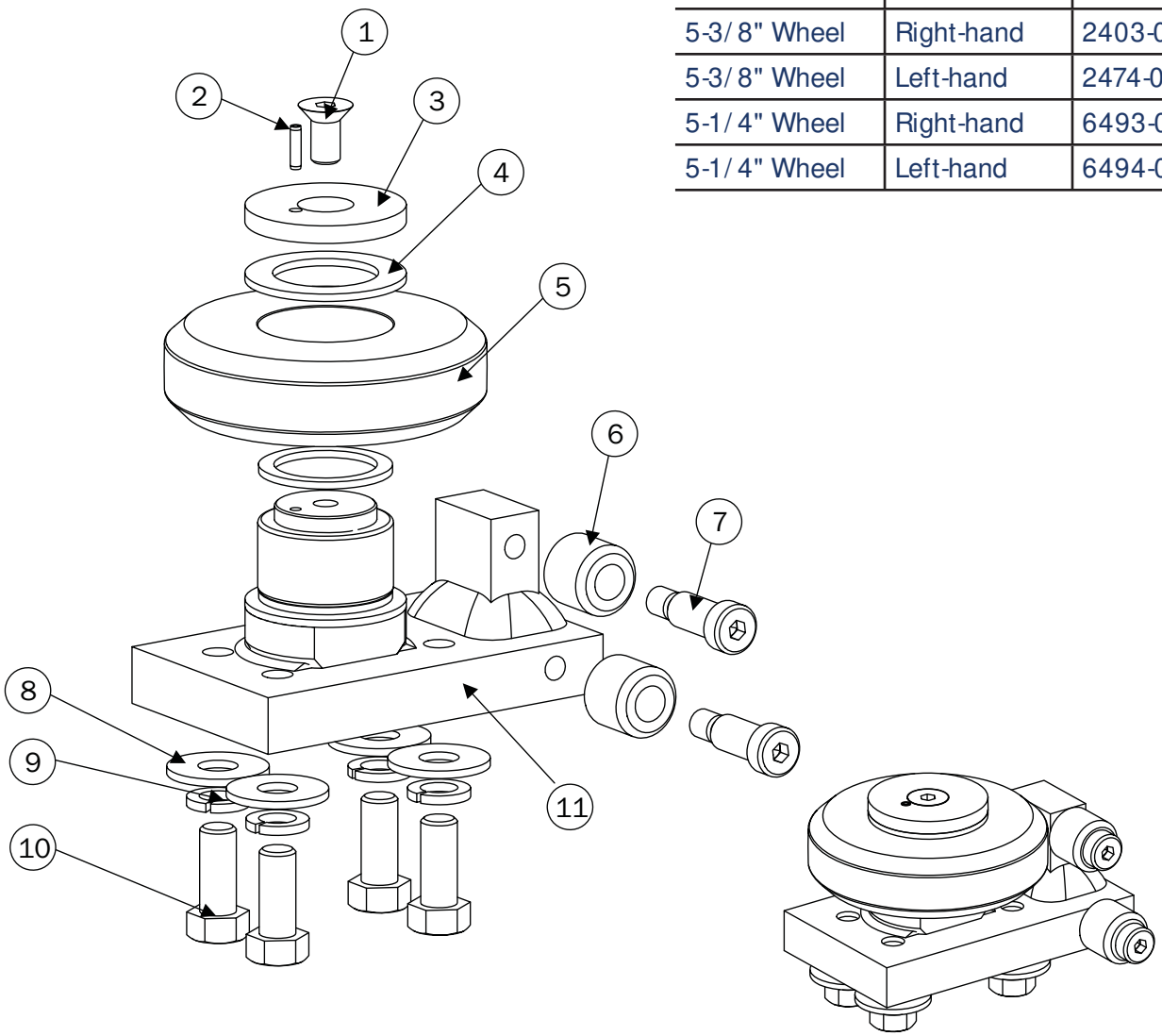

Item	Qty	Part No.	Description
1	1	4299-0016	Screw, FHSC, 1/2-13 X 1
2	1	5209-0012	Pin, Roll, 3/16 X 3/4" Lg
3	1	3629-0000	Washer, Retainer Steel
4	1	3622-0000	Washer, Thrust, 2-3/4 OD
5	1	16505-0000	Wheel, Steel, 5 1/2
	1	6304-0001	Wheel, Steel, 5 3/8
	1	6381-0001	Wheel, Steel, 5 1/4

Item	Qty	Part No.	Description
6	2	5221-0000	Roller 1.25 OD Guide Plstc
7	2	5874-0020	Bolt, Shoulder, 5/8 X 1 1/4
8	4	6296-0015	Washer, Std, Flat, 5/8
9	6	5858-0015	Lock Washer, Std, 5/8
10	4	7278-0024	Screw, HHC, 5/8-11 X 1.5, Gr5
11	1	2400-0000	Whlblk Wldm, Lower RH
	1	2453-0000	Whlblk Wldm, Upper LH

PFLOW INDUSTRIES MATERIAL HANDLING SOLUTIONS
www.pflow.com
P 414 352 9000
F 414 352 9002
6720 N. Teutonia Ave.
Milwaukee, WI 53209

Upper Wheelblock Assembly Steel Wheel with Heat Treated Link

5-1/2" Wheel	Right-hand	16503-0010
5-1/2" Wheel	Left-hand	16504-0010
5-3/8" Wheel	Right-hand	6199-0010
5-3/8" Wheel	Left-hand	6198-0010
5-1/4" Wheel	Right-hand	6491-0011
5-1/4" Wheel	Left-hand	6492-0011

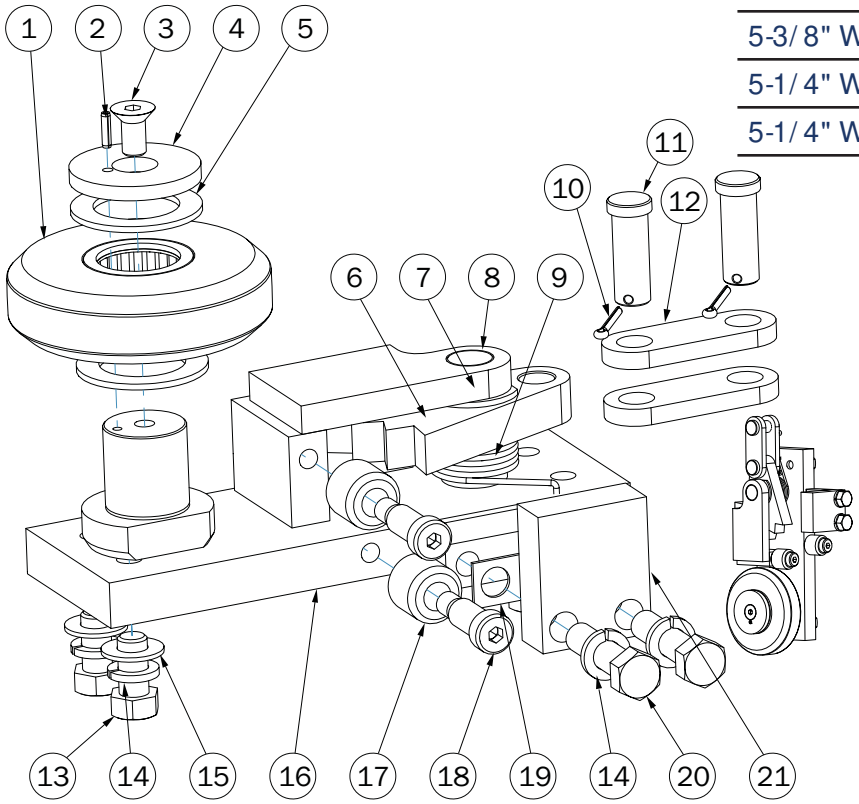

Item	Qty	Part No.	Description
1	1	16505-0000	Wheel, Steel, 5 1/2
	1	6304-0001	Wheel, Steel, 5 3/8
	1	6381-0001	Wheel, Steel, 5 1/4
2	1	5209-0012	Pin, Roll, 3/16 X 3/4" Lg
3	1	4299-0016	Screw, FHSC, 1/2-13 X 1
4	1	3629-0000	Washer, Retainer Steel
5	1	3622-0000	Washer, Thrust, 2 3/4 OD
6	1	6186-0000	Safety Cam Assy
7	1	8339-0000	Bearing, Thrust
8	1	5230-0000	Pin, Cam, Wheelblock
9	1	2443-0000	Spring, Cam, Torsion
10	2	2522-0000	Pin, Cotter, 5/32 X 1 1/4

Item	Qty	Part No.	Description
11	2	2521-0000	Pin, Clevis, 3/4 X 2
12	2	6187-0001	Link, Safety Cam
13	4	7278-0024	Screw, HHC, 5/8-11 X 1.5, Gr5
14	6	5858-0015	Lock Washer, Std, 5/8
15	4	6296-0015	Washer, Std, Flat, 5/8
16	1	5244-0000	Whlblk Wldm, Upper RH
	1	5245-0000	Whlblk Wldm, Upper LH
17	2	5221-0000	Roller 1.25 OD Guide Plastic
18	2	5874-0020	Bolt, Shoulder, 5/8 X 1 1/4
19	1	2767-0000	Spacer, Whlblk Shoe
21	1	2754-0000	Shoe, Wheelblock
20	2	2198-0040	Screw, HHC, 5/8-11 X 2.25, Gr8

MATERIAL HANDLING SOLUTIONS
www.pflow.com
P 414 352 9000
F 414 352 9002
6720 N. Teutonia Ave.
Milwaukee, WI 53209

MATERIAL HANDLING SOLUTIONS
www.pflow.com
P 414 352 9000
F 414 352 9002
6720 N. Teutonia Ave.
Milwaukee, WI 53209

Environment

All components should be ***stored indoors***. The area of storage should be kept at a constant temperature above 55°F (13°C) and relative humidity of approximately 40%, free from heavy dust and contaminants.

NOTICE

Outdoor storage is ***not*** recommended. Our warranty policy does not cover damage as a result of improper storage.

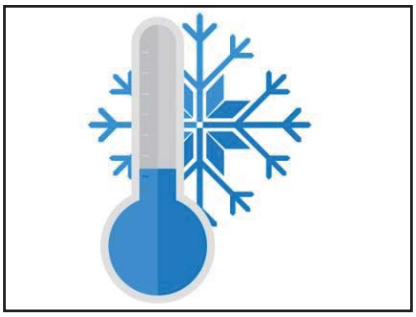

Avoid Cold Temperatures Figure 17-1

Stacking

Except for placing the parts container (crate) and bracing on the empty carriage, stacking of the various gate components is strictly forbidden. Enclosure and gate panels will warp. Objects stacked on top of the columns, drivebase assembly and/or hydraulic cylinders may cause severe damage. See Figure 17-2.

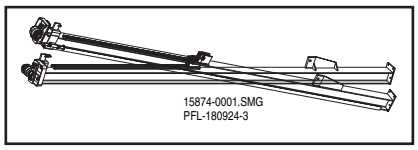

Do Not Stack Components Figure 17-2

Long Term Storage

Storage for more than two (2) months after shipment, will require that the following maintenance procedures be performed every sixty days from date of shipment:

1. If ***roller chains*** are stored for an extended period of time or in a corrosive environment, they must be dipped or stored in a non-detergent oil to retain their original condition.
2. Lightly coat the ***sprockets*** with a non-detergent oil to prevent corrosion. See Figure 17-3.
3. Apply lithium-type grease to the ***pillow block and bearings***. Wrap or trap the pillow blocks to avoid exposure to contaminants if needed.
4. Lubricate the ***safety cams*** on the exposed ***wheelblock assemblies*** with a non-detergent oil and rotate to make sure the safety cams move freely. See Figure 17-4.

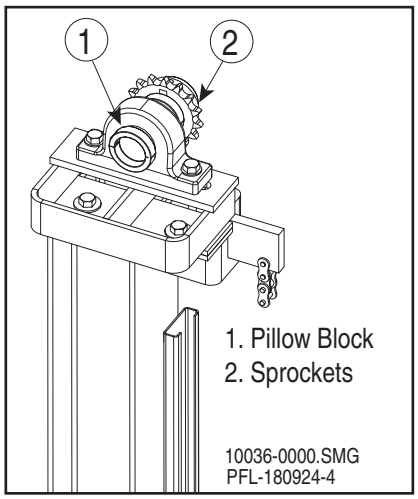

Lubricate Pillow Block Bearings Figure 17-3

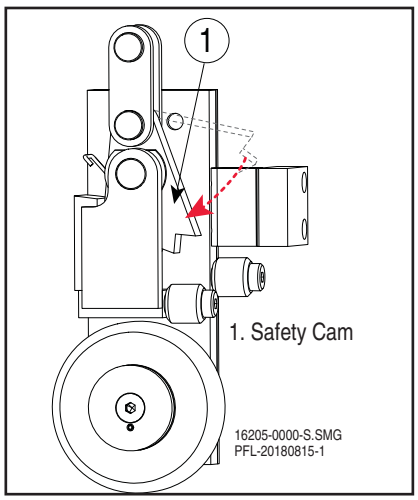

Lubricate and Rotate Safety Cam Figure 17-4

MATERIAL HANDLING SOLUTIONS
www.pflow.com
P 414 352 9000
F 414 352 9002
6720 N. Teutonia Ave.
Milwaukee, WI 53209

Long Term Storage (continued)

5. The motor pump ships with a full reservoir tank. Make sure the reservoir tank remains full to prevent the reservoir from rusting.
6. Hydraulic cylinders must be stored horizontally. The environment must remain constant. All cylinder ends and ports are to remain capped. Rotate the cylinders 180 degrees every two (2) months.
7. Plug the ***electrical component*** inlets to prevent moisture and other contaminants from entering them. Store in a dry, temperature controlled location to prevent corrosion. Place silica gel desiccant inside the control enclosure. Inspect the inside of the control enclosure for any moisture build up. See Figure 17-5.
8. Make sure the ***parts crate*** remains sealed and dry.

Place Inside Control Enclosure
Figure 17-5

Storage for Longer than Six Months

For units stored longer than six months, it is recommended that you contact the PFlow Industries, Inc. Product Support Department for additional information that may be available prior to starting up your unit.

Equipment Manuals

The VRC installation manual, electrical, and owner's manuals are located in the parts container (crate). Do not open the parts container (crate). If the manuals are required, contact the PFlow Industries, Inc. Product Support Department for an electronic copy (.pdf).

PFLOW INDUSTRIES MATERIAL HANDLING SOLUTIONS
www.pflow.com
P 414 352 9000
F 414 352 9002
6720 N. Teutonia Ave.
Milwaukee, WI 53209

Before You Begin

Read this entire manual.

Purpose

The PFlow Industries, Inc. Vertical Reciprocating Conveyor (VRC) is designed for the movement of materials only, up to the VRC's rated capacity, from one level to the next. Passengers are not allowed. The placement of capacity labels, and safety warnings are the installer's responsibility. Make sure the warning labels are placed on each gate and each push button station.

PFlow Industries, Inc. supplies the appropriate signage in a manilla envelope in the parts crate with the original shipment. Contact PFlow Industries, Inc. Product Support Department for signage if another language is needed.

Large P/N 10651-0000
Small P/N 10655-0000

P/N 16794-0000

P/N 10653-0000

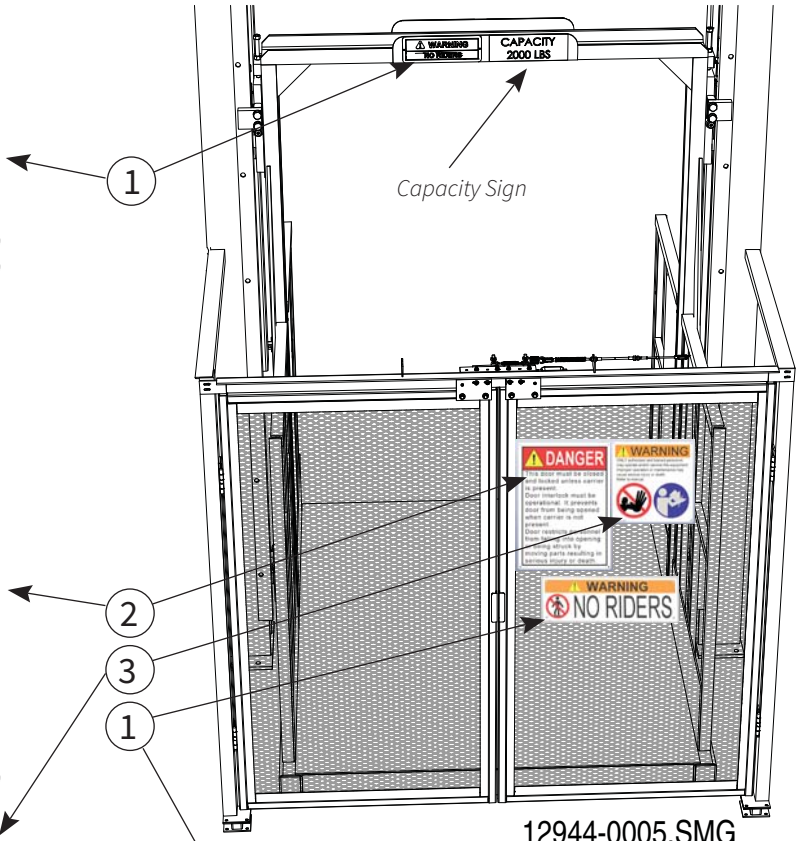

12944-0005.SMG
PFL-1081-3

MATERIAL HANDLING SOLUTIONS
www.pflow.com
P 414 352 9000
F 414 352 9002
6720 N. Teutonia Ave.
Milwaukee, WI 53209

PFLOW INDUSTRIES MATERIAL HANDLING SOLUTIONS
www.pflow.com
P 414 352 9000
F 414 352 9002
6720 N. Teutonia Ave.
Milwaukee, WI 53209

Thank You

PFlow Industries, Inc. would like to thank you for the opportunity to serve you. Your business is appreciated. Please help us to ensure that your expectations are met by taking a few minutes to tell us about the equipment and service that you have received. Complete the Installation Questionnaire and Acceptance Certificate. Return both forms to PFlow Industries, Inc. via e-mail to psd@pflow.com Additional space for comments is available on the next page.

	Yes ✓	No ✓
Product Perception		
Was the equipment shipment complete as expected?		
What items were missing, if any?		
Was the equipment in good condition?		
Describe the equipment damage or concerns with the workmanship, if any.		
Did the equipment match the General Arrangement (GA) drawing?		
Was the equipment dimensionally correct with form, fit, and function?		
Describe any problem areas in detail.		
Electrical Installation		
Was the electrical field wiring completed as required?		
Were there any issues with the electrical components?		
After the electrical installation was completed, was it necessary to return for final adjustments, testing, and training?		
Were you made aware of any electrical problems?		
Describe any "No" answers areas in detail.		
Testing		
Was the equipment tested at full load capacity?		
Were all gates tested to ensure proper operation and interlock operation?		

PFlow Serial Number	Customer/User	Date
Questionnaire Completed by	E-mail Address	
Company	Phone Number	

MATERIAL HANDLING SOLUTIONS
www.pflow.com
P 414 352 9000
F 414 352 9002
6720 N. Teutonia Ave.
Milwaukee, WI 53209

PFLOW INDUSTRIES MATERIAL HANDLING SOLUTIONS
www.pflow.com
P 414 352 9000
F 414 352 9002
6720 N. Teutonia Ave.
Milwaukee, WI 53209

Acceptance

We, the Customer, accept the equipment listed below as being properly installed, tested, and performing to our satisfaction. This form covers both the mechanical and the electrical installation of the equipment. This acceptance in no way releases either PFlow Industries, Inc. or the installing contractor(s) of any warranty obligations. If there are any exceptions or unresolved items, please include detailed information.

PFlow Serial Number:	Model Number:	☐ B	☐ D	☐ DB	☐ F	☐ M	☐ MQ	☐ 21	☐ CV	Other _____
Job Name:										
Site Street Address:										
Site Mailing Address:										
Site City:					State:			Zip Code:		
Customer Contact Name:					Contact Title:					
Customer Contact Phone: ( ) Ext					E-Mail:					

Tests Performed					
Load Capacity:				Start-up Date:	
Load Test:	☐ Yes	☐ No	at ____ % of lift capacity	Customer Initials:	
Operation Test:	☐ Yes	☐ No		Comments:	
Gate/Interlock Operation:	☐ Yes	☐ No	☐ Not Applicable		
Other Test:					
Other Test:					

Personnel Instructed on the Operation and Preventive Maintenance:	
Name:	Company:
Name:	Company:

Accepted by:	Acceptance Date:
Name/Phone:	PFlow Rep Present:
Title:	Name:
Company:	Company:

Please return a copy of this form to the PFlow Industries, Inc. Customer Support Department at csd@pflow.com.

MATERIAL HANDLING SOLUTIONS
www.pflow.com
P 414 352 9000
F 414 352 9002
6720 N. Teutonia Ave.
Milwaukee, WI 53209